GUILD ◆ EDITION

Woodsmith®

Woodsmith.com

Vol. 39 / No. 231

Bench Grinder Makeover

Also:

Tricky Table Saw Cuts Made Easy

Router Secrets for Smoother, Cleaner Cuts

Curves at the Band Saw — Our Top Tips Revealed

Plus: Must-Have Weapons for Rust Removal

A Publication of Cruz Bay Publishing, Inc.

Woodsmith®

CREATIVE HOME GROUP
GENERAL MANAGER Donald B. Peschke
EDITORIAL MEDIA DIRECTOR Bryan Nelson
MANAGING EDITOR Vincent Ancona
SENIOR EDITORS Wyatt Myers, Phil Huber
ASSOCIATE EDITOR Robert Kemp
ASSISTANT EDITOR Erich Lage

EXECUTIVE ART DIRECTOR Todd Lambirth
SENIOR ILLUSTRATORS Harlan V. Clark, Dirk Ver Steeg, Peter J. Larson
SENIOR GRAPHIC DESIGNER Bob Zimmerman
GRAPHIC DESIGNER Becky Kralicek

CREATIVE DIRECTOR Chris Fitch
PROJECT DESIGNER/BUILDER John Doyle
CAD SPECIALIST Steve Johnson
SHOP CRAFTSMAN Dana Myers

SENIOR PHOTOGRAPHER Crayola England
ASSOCIATE STYLE DIRECTOR Rebecca Cunningham
SENIOR ELECTRONIC IMAGE SPECIALIST Allan Ruhnke
PRODUCTION ASSISTANT Minniette Johnson

Woodsmith® (ISSN 0164-4114) is published bimonthly by Cruz Bay Publishing, Inc., 5720 Flatiron Parkway, Boulder, CO 80301.
Woodsmith® is a registered trademark of Cruz Bay Publishing.
Copyright© 2017 Cruz Bay Publishing, Inc. All rights reserved.
Subscriptions: Single copy: $6.95.
Canadian Subscriptions: Canada Post Agreement No. 40038201. Send change of address information to PO Box 881, Station Main, Markham, ON L3P 8M6. Canada BN 82564 2911
Periodicals Postage Paid at Des Moines, IA, and at additional offices.
Postmaster: Send change of address to *Woodsmith*, Box 37274, Boone, IA 50037-0274.

Printed in U.S.A.

WoodsmithCustomerService.com

ONLINE SUBSCRIBER SERVICES

- **VIEW** your account information
- **RENEW** your subscription
- **CHECK** on a subscription payment
- **PAY** your bill
- **CHANGE** your mailing or e-mail address
- **VIEW/RENEW** your gift subscriptions
- **TELL US** if you've missed an issue

CUSTOMER SERVICE Phone: 800-333-5075 weekdays

SUBSCRIPTIONS
Customer Service
P.O. Box 842
Des Moines, IA 50304-9961
subscriptions@augusthome.com

EDITORIAL
Woodsmith Magazine
2200 Grand Avenue
Des Moines, IA 50312
woodsmith@woodsmith.com

ACTIVE INTEREST MEDIA

PRESIDENT & CEO **Andrew W. Clurman**
SENIOR VICE PRESIDENT, TREASURER & CFO **Michael Henry**
EXECUTIVE VICE PRESIDENT, OPERATIONS **Patricia B. Fox**

from the editor

Sawdust

For each issue of Woodsmith, we strive to cover the the full range of what makes our hobby so great. So whether you're looking for a project to build for inside your home or out in the yard, or even the workshop, there's something for every spot in these pages.

EXTERIOR PROJECT. For starters, check out the birdhouse above. It's a great outdoor project for the bird lover. You'll have the perfect spot for a community of purple martins in your yard once it's in place. Along the way, you'll learn some great woodworking skills, like creating the staved, circular body and solid-wood rings that form the narrow porches around the outside of the birdhouse.

INTERIOR DESIGNS. In need of a simple project for inside the home? You'll want to check out the coat rack on page 18. It's a project that's easy to build in a weekend. The contemporary look is the result of joining sets of different-size blocks together into a single unit. Contrasting, flip-down hooks complete the look, ensuring your coats, jackets, and hats are stored in style.

Style is also the name of the game when it comes to the empire bench that begins on page 44. I'll let you read the article to learn more about the origins of the empire look. I just want to make sure that all the curves don't intimidate you. We provide all the details for conquering those challenges. The end result is a project you'll be proud to display in any room.

WORKSHOP UPGRADE. I haven't visited too many shops without a grinder mounted to a bench somewhere. But most of them aren't getting used as much as they should. Well, the bench grinder station shown on page 36 changes that. The station surrounds the grinder with a tool support and a unique set of sliding tables. This setup makes it a snap to easily and accurately sharpen tools or shape metal.

Finally, sawhorses are a mainstay in many shops. But they aren't always the best choice for many tasks due to their height. There are times when you need your worksurface just a bit lower for better results. That's where the sawbench on page 22 comes in handy, it's simply shorter. This makes it suitable for any task you need to use a handsaw for, like breaking down lumber. Or if you just need to work or assemble a project at a lower height. I have a pair in the works in my shop already.

Bryan

contents

No. 231 June/July 2017

Projects

weekend project

Flip-Down Coat Rack 18

Keep your coats and hats easily accessible with this simple rack. A series of blocks glued together in a random pattern gives it a modern look. Plus, it looks great on its own.

shop project

Must-Have Sawbenches 22

Every shop needs a place to break down lumber. With a pair of sawbenches and a handsaw, you'll be able to complete the task in less time than it would take to plug in your circular saw.

outdoor project

Martin House 26

Here's a project for the birds, literally. This 12-compartment "condo" will keep the martins living in style. And there's some great woodworking techniques to learn as you build it.

shop project

Bench Grinder Makeover 36

Turn an ordinary bench grinder into a precision grinding and sharpening station with this handy upgrade. Sliding tables ensure accurate setup and results.

heirloom project

Stylish Empire Bench 44

Graceful curves and heavy-duty quartersawn oak give this bench its heirloom look. But it's the rock-solid woodworking that will ensure this bench stands the test of time.

Departments

from our readers
Tips & Techniques 5

all about
Non-Woven Abrasive Pads. 10

router workshop
Smoother, Cleaner Cuts 12

great gear
Kreg Mobile Project Center 14

woodworking technique
Curves at the Band Saw. 16

working with tools
Using Handsaws 54

in the shop
Better Veneer, Better Projects . . . 58

woodworking essentials
Board Shopping Basics 60

mastering the table saw
Tricky Cuts Made Easy 62

tips from our shop
Shop Notes. 64

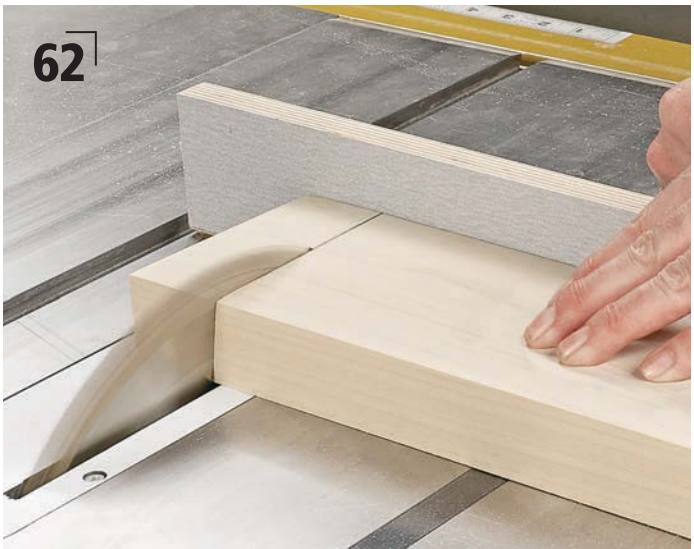

from our readers

Tips & Techniques

Anchor Bolt Storage Rack

I'm always looking for creative ways to use leftover materials in my shop. One I came up with recently involves anchor bolts — the L-shaped fasteners that are used to cinch sill plates to concrete foundations. They became the main ingredient in a storage rack that combines the best attributes of a shelf and a hook.

These bolts, combined with a length of 2x4 framing lumber for the mounting cleat, allow me to store clamps and hang hoses with ease. For my setup, I spaced the holes as shown in the drawing, but you can adjust them based on your needs. Then drill the counterbores and holes needed, as shown in detail 'a'.

To mount the anchor to the cleat, run a hex nut all the way onto the anchor bolt thread until it stops, add a flat washer, and insert that end into the hole on the mounting cleat. Put a flat washer and another hex nut onto the bolt from the back (counterbored) side, and cinch it tight. Make sure to hold the end of the bolt upright while tightening. Screw the rack to wall studs, using fasteners of the appropriate size. With the rack firmly attached, you can hang a load of clamps, hoses, or whatever you like, and none of the items will roll off.

David Harrison
Salem, Oregon

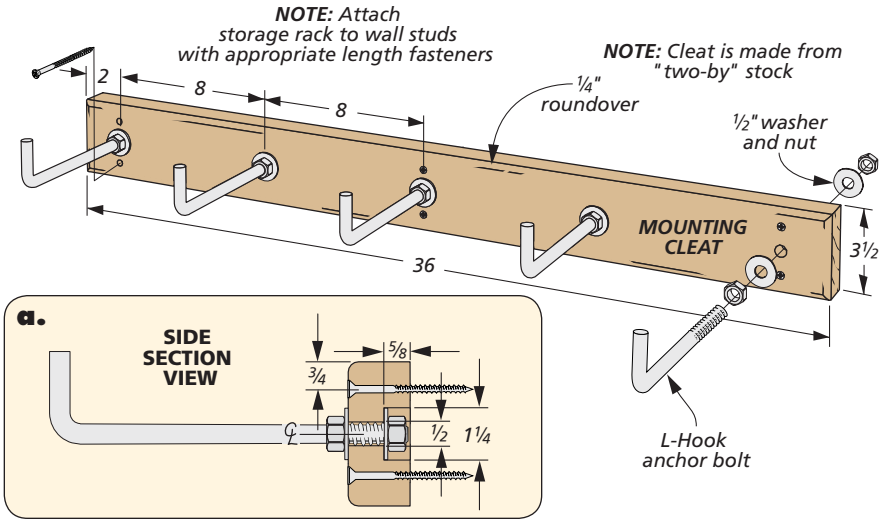

Win This Forrest Blade

Simply send us your favorite shop tips. If your tip or technique is selected as the featured reader's tip, you'll win a *Forrest Woodworker II* blade. To submit your tip or technique, go to *SubmitWoodsmithTips.com*. There you can upload your tips and photos for consideration.

The Winner!

Congratulations to Robert Smith, the winner of this *Forrest Woodworker II*. To find out how you can win this blade, check out the information at left.

Square Assembly Station

Lately I've been turning out a lot of simple projects with face frames that are held together with pocket screws. Holding the frames steady and square while screwing them together has proven to be a challenge that needed a solution.

Adding a set of adjustable cleats to the sides of my bench solved the problem nicely. The cleats are held in place with studded knobs that screw into threaded inserts. Make sure to leave the cleats short of the workbench corner. This way, when you're assembling mitered corners, they'll fit nice and tight. As the inset photo shows, the slots in the plywood allow you to slide the cleats out of the way when not in use.

Anthony Yacovelli
Pottstown, Pennsylvania

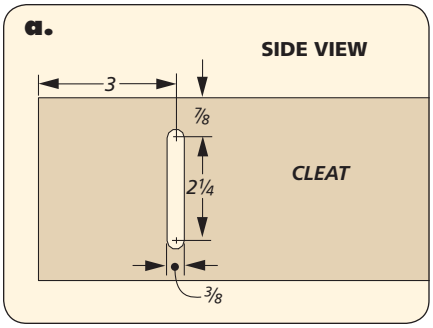

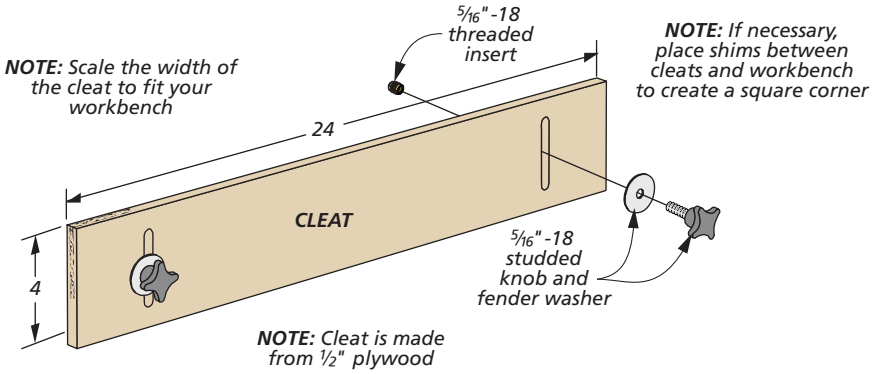

QUICK TIPS

Glue Bottle Maintenance. When refilling bottles of glue, *John Welch* of *Springfield, OH*, adds an extra level of protection. He coats the threads with lip balm, (petroleum jelly also works). This prevents a bond from forming between the glue bottle and the cap.

Dowel Sizing. *Sidney Phillips* of *Melville, NY*, has a simple way of determining the size of dowels and other odd-sized parts. He starts by setting his combination square at an inch mark. Then he traps the dowel with an additional square. Where the squares intersect reveals the diameter of the dowel.

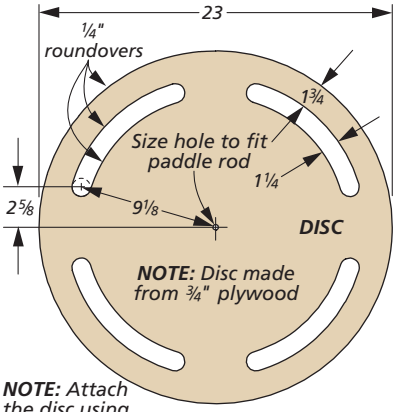

NOTE: *Attach the disc using hardware removed from original handle*

Dust Collector Handle Upgrade

Fitting tools into the tight quarters of my small shop is always a challenge. And even though the space is small, I still manage to kick out an alarming amount of dust. I was happy that I was able to shoe horn in a small, but mighty, dust collector in the corner.

As you see in the photo, it's the type that has a canister filter on top. I had one problem with the setup. To clean the pleats, I had to rotate the large handle on the top of the filter. This meant leaving the unit out from the wall, which ate into my floor space. I could roll out the collector, clean the filter, then roll it back, but that proved to be a hassle, as well.

I decided to abandon the handle and make the large handwheel you see in the drawing above. It's a simple plywood disc that lets you turn the paddles on the canister without having to move the collector. A hole in the center lets you bolt it to the paddle arm. And with the four slots, you can grab and turn the disc freely in the proper direction.

Les Beeckman
Saginaw, Michigan

Drawer Location Labels. After going through a lot of effort matching the grain patterns on the drawer fronts of his new tool chest, *Mack Brown* of *Spokane, WA*, wanted to make sure all this effort showed through on the finished project. So he wrote the drawer locations on the underside of each drawer. He then had no problem installing the drawers in proper relation to each other.

DIGITAL WOODSMITH

SUBMIT TIPS ONLINE

If you have an original shop tip, we would like to hear from you and consider publishing your tip in one or more of our publications. Jump online and go to:

SubmitWoodsmithTips.com

You'll be able to tell us all about your tip and upload your photos and drawings. You can also mail your tips to "Woodsmith Tips" at the editorial address shown on page 2. We will pay up to $200 if we publish your tip.

RECEIVE FREE ETIPS BY EMAIL

Now you can have the best time-saving secrets, solutions, and techniques sent directly to your email inbox. Just go to:

Woodsmith.com
and click on,
"Woodsmith eTips"

You'll receive one of our favorite tips by email each and every week.

Sizing Screws on the Fly

Having that can of old screws from past projects is nice, but trying to find the right size can be a challenge. It turns out there's a simple formula for determining the size of a woodscrew, such as a #6, #8, or any size up to #14.

Measure the diameter of the head of the screw in 16ths, (round the number up if need be). Multiply that number by 2. Then subtract 2 from that sum. And there you are.

Here's an example. A screw head measures $^{5}/_{16}$" in diameter. Five times two equals ten. Subtract two, and the answer is eight. So the screw is a #8.

Rich Rechkemmer
Beardstown, Illinois

Mini Blind Drawer Slides

I recently had a cabinet job that was on a tight budget. The drawers needed to operate smoothly, but expensive slides were out of the question. An abandoned set of vinyl mini blinds turned out to be the answer. Gluing them to the inside of the cabinet served as a perfect glide for the drawers.

Taking a couple of slats, I cut them to length with a utility knife, but found that the arched surfaces of the slats wouldn't lie flat. So I smoothed them out using a clothes iron set on low heat (inset photo, above). Once the slats were flat, I glued them in place using contact cement (applying it to the slat and the cabinet). The drawers now slide smoothly. And if the slats get worn, I still have plenty of replacements.

Keith Ross
Estey's Bridge, New Brunswick

QUICK TIPS

Waterstone Storage. *Steve Kralicek* of *Omaha, NE,* uses waterstones daily in his shop. So instead of drying and storing them away, he leaves them in water in a plastic bin that has a lid. He adds a capful of bleach to the water to prevent any mold buildup between water changes.

Better Gripping Pocket Hole Jig. *Micah Schonberger* of *Snowmass, CO,* uses pocket hole joinery on occasion in his shop. As the photo shows, he found that adding a strip of adhesive-backed sandpaper to the bottom of his single hole jig prevents it from shifting while in use.

Bench Vise Racking Resolved

When clamping small parts in my vise, the vise occasionally has a tendency to rack and lose its grip on the part. So I came up with a simple add-on for my vise to prevent that problem.

It involves attaching a wood face to my vise jaw that has a couple of angled notches cut into the ends. This lets me use a simple wedge to oppose the piece I'm clamping in the vise.

I found that unless the wedge makes full contact with the notch, it will pop out of the vise. So to make these pieces match perfectly, I made four identical wedges and used them as ramps to rout the notches in the vise face. The three drawings below give you all the information needed and the step-by-step details for making both parts.

Once you've installed this setup, it's easy to use. Start by lightly clamping your workpiece in either end of the vise. Then slide the wedge into the notch at the other end and hold it in place while you tighten the vise.

Robert Smith
Minden, Nevada

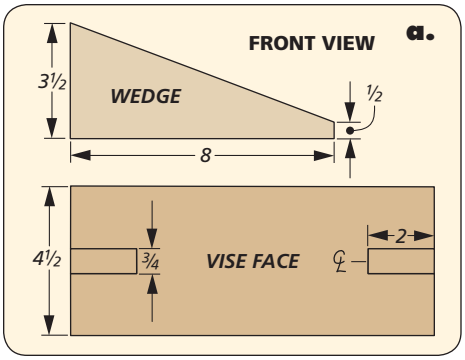

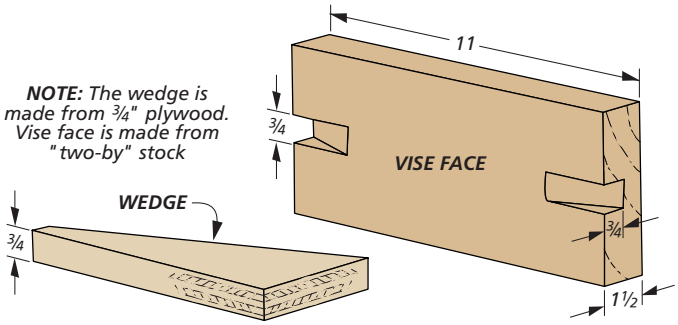

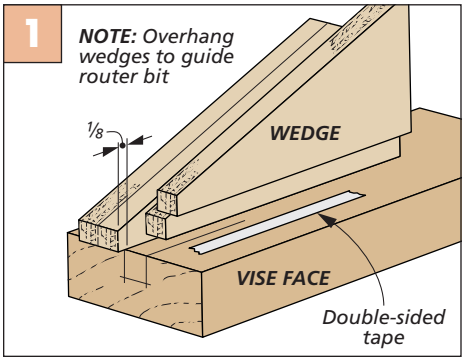

Tape the Wedges. Apply double-sided tape to the vise face and align the wedges to the layout lines. Be sure to overhang the wedges to guide the router bit.

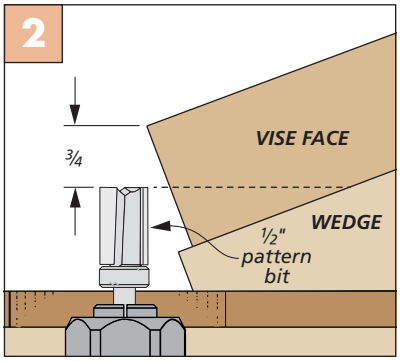

Adjust the Bit Height. Flip the workpiece and adjust the pattern bit height so it meets the layout line for the entrance of the notch.

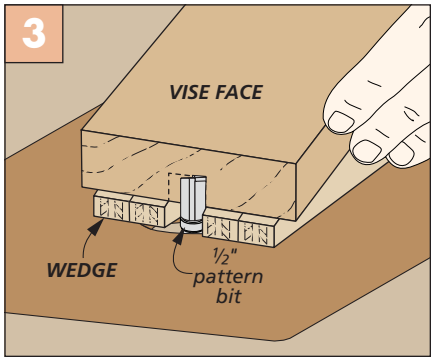

Cut the Notch. Nibble away at the notch until the bit passes through the face. Then move the ramps to the other side of the face and repeat the process.

all about

non-woven Abrasive Pads

Like sandpaper, glue, or woodscrews, steel wool has been a staple in my shop for as long as I can remember. It's useful for all kinds of things, from rubbing out a finish to cleaning up the cast iron top of a table saw or jointer. And while I still keep a supply of steel wool on hand, in the last few years I've come to rely more and more on a different type of product — non-woven abrasive pads.

Chances are you're already familiar with non-woven abrasive hand pads. You'll find them in many kitchens, in the form of scrub pads for cleaning pots and pans. They're often referred to as *Scotch-Brite* pads. (*Scotch-Brite* is actually a trade name of the *3M* company, who pioneered the development of non-woven abrasives.) But non-woven abrasives are used in all sorts of industrial applications, as well.

WHAT ARE THEY? Non-woven abrasive pads are made up of synthetic nylon fibers and resins. The fibers are embedded with the same types of abrasive materials found in sandpaper (aluminum oxide or silicon carbide). The result is a mesh-like pad that's flexible, so it conforms to various shapes and contours. And as you use the pad, fresh abrasive is continually exposed.

The pads are available in different grits and are color-coded to make them easier to recognize at a glance. Although there

▲ In addition to hand pads, non-woven abrasives are also available as belts, discs, or mounted on arbors and wheels for a variety of power tools.

Comparing Abrasives

Pad Color	Steel Wool Grade (approx.)
Green	2 or 3
Maroon	1
Gray	00
White	0000

are a number of different colors, the four that you'll find most readily available are green, maroon, gray, and white. The chart on the previous page shows how each color compares to various grades of steel wool. (It's worth noting that some manufacturers may have slightly different color-coding systems.)

OPTIONS. I always have a supply of rectangular hand pads in my shop. Abrasive hand pads are commonly sold in 6" x 9" sizes (refer to page 67 for sources), but you can easily cut them down with a pair of scissors to create a smaller pad. Occasionally, I'll cut a disc out of a pad to use with my random-orbit sander. The pads will stick to most hook-and-loop sanding pads, but most often I just use them by hand.

Non-woven abrasives are also sold in a variety of other forms, such as discs and belts, for use with sanders and drills (lower left photo on previous page). Recently, I've even begun using a non-woven abrasive product on my bench grinder, as shown in the box below.

BENEFITS. Abrasive pads have a few benefits over steel wool. For starters, they don't shed metal particles like steel wool. This makes them ideal for sanding between coats of finish on a project, as shown in the main photo on the previous page. (I use the gray and white pads for this purpose.) With steel wool, you always run the risk of steel particles being left behind and causing rust spots with a water-based finish. Although non-woven abrasives do shed abrasive particles, a quick blast of compressed air clears them out of any nooks or crevices. And unlike sandpaper, the pads don't load up with finish.

A maroon abrasive pad is ideal for keeping the cast iron tops of your shop equipment clean and free of rust.

Non-woven abrasive pads are great for creating a brushed or satin finish on aluminum or other metals.

RUST REMOVAL. I use abrasive pads for cleaning and rust removal more than any other purpose. The maroon pads are great for removing rust or rejuvenating the cast iron surfaces of your power tools (upper left photo).

For this application, the pad works best if you use a lubricant of some sort. Just spray the surface with *WD-40* or another lubricant and give it a good scrubbing with the pad. Then simply wipe the surface off with a rag or paper towel. One benefit of abrasive pads is that you can wash them out and reuse them if they get dirty.

BRUSHED FINISH. Although it's a somewhat specialized application, abrasive pads work well for creating a satin or brushed finish on metal parts or hardware, like you see in the upper right photo. Whether you're creating your own hardware or rejuvenating an existing piece, an abrasive pad will leave a uniform look across the surface.

Abrasive pads cost little and are long-lasting. Even if you aren't ready to give up your steel wool, I think you'll find they're worth a try. W

A Closer Look: CONVOLUTE WHEELS

One abrasive product I've recently discovered is a convolute wheel. Here, the non-woven abrasive material is wrapped tightly around a core, creating a stiff, dense wheel. It's designed to run in one direction only.

Convolute wheels are sold as "deburring wheels," but they're great for removing rust and polishing metal. I have one mounted on my bench grinder, as a substitute for a wire wheel. But unlike a wire wheel, a convolute wheel doesn't shoot little wire spears at you while using it. For sources, turn to page 67.

A convolute deburring wheel can take the place of a wire wheel for removing rust and polishing metal.

choosing the right Router Speed

As power tools go, routers are uncomplicated. Beyond installing a bit and setting the cutting depth, you're pretty much ready to fire up the router and get to work. But many new routers also include a variable-speed function as a feature.

This feature allows you to adjust the bit through a range of speeds, from 24,000 RPM down to around 10,000 RPM. Here's the challenge: How do you know what speed to set for a given task?

There are few rules when it comes to adjusting the speed on a variable-speed router. On one hand, this allows for some flexibility and experimentation when deciding on the right speed. On the other, without some guidelines to go by, it's tough to know when or how much you should adjust the speed. While I usually run the router at full speed, I've found four places where it makes sense to slow down in order to get better results.

BIG BITS. About the only place that you find specific instruction on slowing down a router is when using a large-diameter bit, like the raised-panel bit shown in the photo above. It all has to do with the rim speed of the bit. The drawings below demonstrate that as the diameter increases, the rim speed jumps way up. Higher speeds reduce

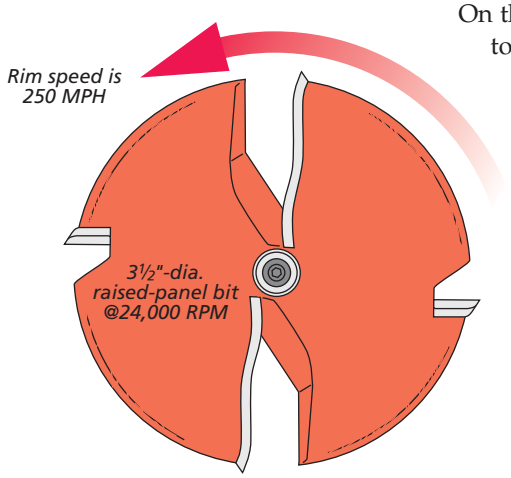

Router Bit Speed Chart

Bit Diameter	Maximum Speed (RPM)
Up to 1"	24,000
1¼" to 2"	18,000
2¼" to 2½"	16,000
3" to 3½"	10,000

▲ Routers with built-in variable speed controls allow you to easily dial in the correct speed (left). Aftermarket speed controllers provide the same features for older or single-speed routers (right).

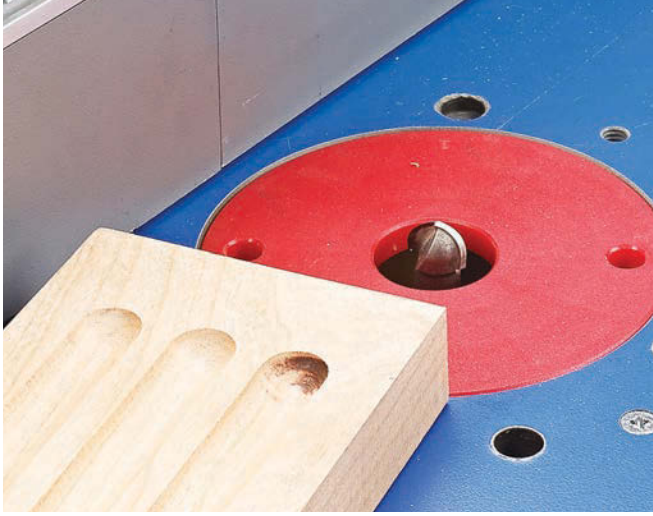

▲ At the beginning and end of a stopped cut, the bit lingers and can lead to burning (right flute). A reduced bit speed can help you avoid it.

your ability to control the workpiece. In addition, the router motor is subjected to strain that can lead to damage.

Large diameter bits usually include a speed range (or upper limit) for setting your router. If you don't have that information, you can often find it on the website of the router bit manufacturer.

SETTING THE SPEED. Changing the router speed isn't as easy as it sounds. The speed-control dial on most routers doesn't list the actual RPMs. Instead, you may just see a set of numbers, as shown in the upper left photo. To translate the number to the actual RPM, you need to consult your owner's manual. However, it won't take long for you to remember what speed each dial setting indicates without looking it up.

If your router doesn't have a speed control, you aren't out of luck. Auxiliary speed controllers are available, as shown in the middle photo above. After plugging your router into the controller, you can change the speed with the turn of a dial. For sources, turn to page 67.

STOPPED CUTS. Another operation where you may want to slow the router down is when making stopped cuts. The reason is heat buildup. When a spinning bit lingers over a portion of the workpiece, heat rises and causes the wood to scorch. Using a steady feed rate, you can prevent heat from building. But at the beginning and end of a stopped cut, it's impossible to avoid.

You can see a good example in the flutes in the upper right photo. At full speed, the right-hand flute burned at the start of the cut. That blemish is difficult and time-consuming to remove. By stepping down the speed just one notch, I was able to rout the other two flutes without burning.

This technique applies not only to decorative effects like stopped chamfers and roundovers, but also joinery details like stopped rabbets, grooves, and dadoes.

DEEP CUTS. A related situation is found when routing deep inside a workpiece, like cutting a mortise or routing out the waste for bowl (photo at right). Here, you compound the problem of stopped cuts with the bit buried below the surface. Wood is an insulator, so the heat can build up even more. To preserve the life of the bit, reduce the speed of the router and minimize heat build-up.

▲ When routing bowls, heat can build up and lead to burn marks and dull bits. Slow down the router to prevent damage.

▲ Exotic wood like this wenge can be a challenge to rout smoothly. Slowing down the router speed is one factor to help get the best results.

HARD, DENSE MATERIALS. One final instance where I slow down the router speed is when I'm working with hard, dense materials — especially exotic wood, as you can see in the left photo. Used in conjunction with light passes, a steady feed rate, and a sharp bit, a variable-speed motor gives you another "tool" to respond to the material.

EXPERIMENT. Knowing that there aren't definitive rules for reducing a router's speed frees you to experiment with different bits and wood species. A few test cuts are all it takes. The benefit is getting to know the capabilities of your router and learning more about the materials you work with. W

great gear

Kreg Mobile Project Center

With heavy-duty construction and plenty of options and accessories, this project center is a worthy shop addition.

The workbench is unquestionably the cornerstone of my shop. But it's always helpful to have a few extra worksurfaces around, whether I'm working on a big project or need something mobile to move around to other areas of my home.

I build these extra worksurfaces myself whenever possible. But even I'll admit there are some handy options available for purchase, too. After giving it a trial run in my shop, I can safely say that the *Kreg Mobile Project Center* passes that test. Now, there are no shortage of these types of portable worktables on the market, but I feel the *Kreg* hits a few notes that are lacking in some of the others.

DURABLE CONSTRUCTION. All things being equal, a mobile workstation that's going to win me over has to be well-built. And *Kreg* certainly didn't cut any corners here. You can get a good overview of the system from the photo on the left. The legs are solid steel, and so are the rugged extensions that support the worksurface when in use. Non-skid rubber feet keep the station from shifting around in use. The worksurface is durable polypropylene that's dead-flat and also lightweight for easy transport (lower right photo, next page).

The included *Automaxx* clamp slides along the T-track to act as an easy hold-down as you're working at the center.

HANDY FEATURES. Beyond its solid stature, the center can also do more than your average mobile workstation. One feature that makes it so useful is an aluminum T-track in the center of the top. This accommodates a range of accessories, including a *Kreg Automaxx* clamp that comes with the center.

You can use this clamp in a couple of different configurations. It will fit in a keyhole slot on the side of the center to clamp onto the edge of workpieces, as shown in the main photo on the previous page. Or you can position it anywhere along the T-track for use as a hold-down on the table, as indicated in the lower right photo on page 14. I found that the T-track was also adept at holding round stock like dowels in place, as shown in the lower left photo below.

Along with the clamp, the center comes with four bench dogs for securing work. There's also a shelf underneath the worksurface, and recessed trays for holding hardware and other small items. A lip along the perimeter of the top accepts *Kreg* containers, which can be purchased separately for holding hardware.

VERSATILITY. Finally, the knockout punch for the *Kreg* center over other workstations might just come down to how versatile it is. In its standard work-center configuration, it's pretty useful, but the two leaves of the worksurface can also fold down in order to use it like a sawhorse. *Kreg* supplies a couple of bushings that you can screw to a length of "two-by" material in order to make a sacrificial top that slides in the T-track (upper left photo below).

▲ With the included keys (upper inset photo), you can lock two of the centers together side by side to increase the capacity of your workstation. Or slip 2x4s into steel L-brackets that lock into the legs of the centers (lower inset) and add an auxiliary top to create a workbench.

▲ By folding the center's top leaves down, you create a handy sawhorse. You can add a sacrificial 2x4 top to the T-track (top left), or leave it exposed to hold a round object like a dowel (bottom left). The entire center also folds up for easy transport (right photo).

You can leave the sacrificial top off the sawhorse and use the *Automaxx* clamp if you're making a cut beyond the surface of the sawhorse (lower left photo).

If you invest in a couple of the centers, you have even more options. Each center comes with a pair of keys that fit into tabs on the edges of the worksurfaces to allow you to lock them together side by side (photos above). This makes working on larger parts, like case sides, a little more manageable.

And if you need even more workspace, there are two steel L-brackets with each center that accommodate a length of 2x4 between them. As shown in the lower photo above, this allows you to install an auxiliary worksurface between two centers to create what is essentially a workbench.

The *Kreg Mobile Project Center* costs $160. It's available from several retailers (Sources, page 67). I found this handy item to be a step up from the average portable worktable, and it's earned a permanent spot in my shop. W

band saw Curves

Straight and square — that's the theme that runs through most every shop, every day. A lot of time is spent keeping tools tuned to meet this goal. But on occasion, you get thrown a curve — you know — shaping parts that don't follow the usual path of woodworking. Instead of laying straight, the parts need to curve.

That was the challenge I faced with the empire bench project on page 44. This project has a number of curves, but the biggest head-scratcher was the slats at the end of the bench.

I considered gluing these up from multiple thin laminations, but the amount of time it would take to make ten slats was not appealing. Also, I was worried about the parts "springing back" when the clamps came off and not matching the curve of the legs. To make the process simple, I decided to enlist my band saw.

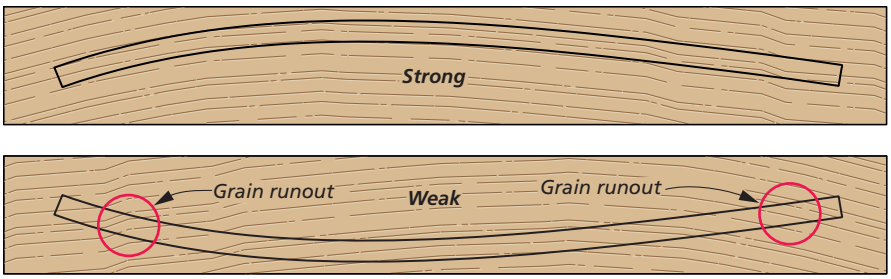

Match the Grain to the Curve. Grain runout is grain running opposite to the profile. You'll get a better appearance and a stronger part by aligning the grain direction to match the profile of the workpiece as closely as possible.

BAND SAW TO THE RESCUE. For gentle curves, it's possible to cut the parts out of a solid block of wood at the band saw. There are just a couple of things that come into play here: the shape you want to make, and finding boards with an edge grain pattern that's compatible to that shape.

At the center of this balancing act is how much grain runout the piece can tolerate without compromising the strength of the slat. Some wandering in the edge grain is not necessarily a bad thing, just match its flow to the curve as best as you can. This is the reason I chose extra-thick lumber here, it gives me options. The two drawings to the left provide some more insight into the grain matching process.

TEMPLATE TIME. As with most curved parts, I started this process with a template of the slat, like the one shown on

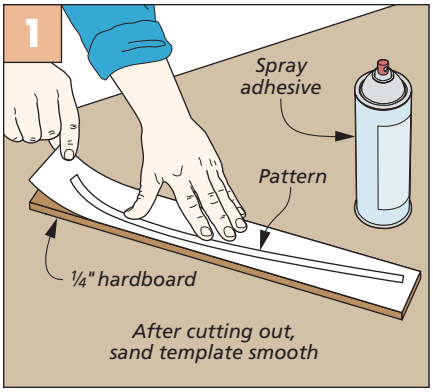

Create the Template. Glue the pattern to a piece of hardboard, then use it to create a template for making the slats.

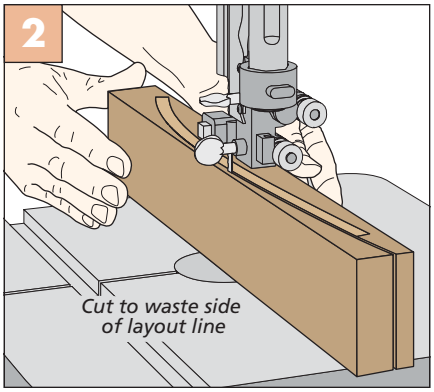

Convex Curve First. At the band saw, cut out the convex side of the slat. Leave the line as a guide to sand to.

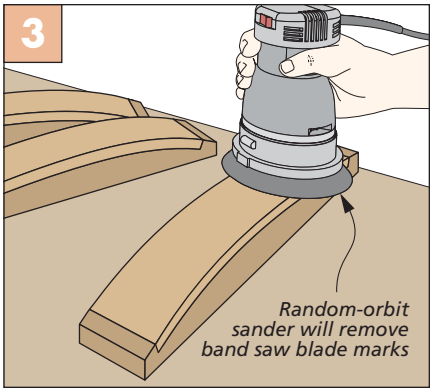

Sand Curve Smooth. Use a random-orbit sander to smooth the slat. Increase the grit of the paper to a 180-grit finish.

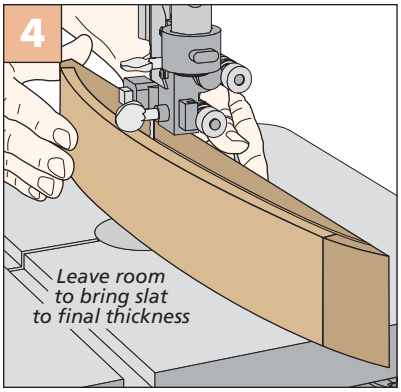

Cut Concave Curve. Back at the band saw, cut the opposite face of the slat. Again, cut proud of the line.

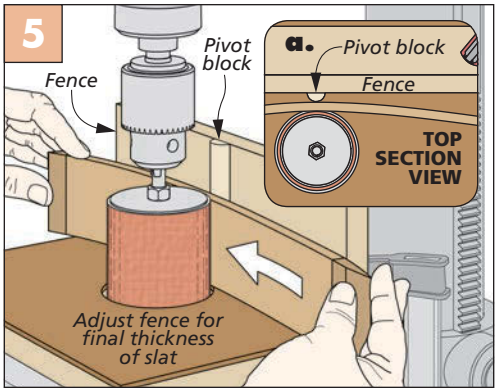

Sand Concave Curve. Sand the concave surface of the slat using a sanding jig to ensure proper thickness.

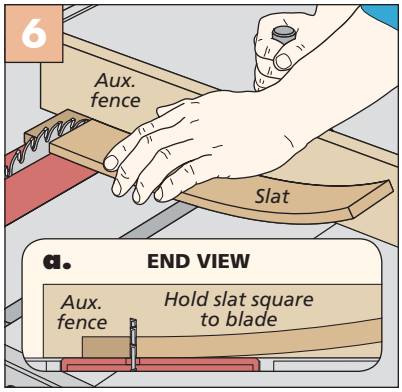

Cut to Final Length. At the table saw, trim the slats to their final length. Hold slats square as you go.

page 50. First I scaled it and glued it to a piece of hardboard (Figure 1). After cutting and sanding the template, I traced it on all the blocks. Leaving the blocks long allows for maneuvering while cutting and sanding the slats.

BAND SAW WORK. In Figure 2, I started by cutting the convex curve of the slat. Staying just outside of the pencil line makes sanding out blade marks an easy task (Figure 3). The inner curve is cut in a similar fashion, as Figure 4 shows. But sanding the inner curve compelled me to try another method, a drill press sanding jig.

DRILL PRESS JIG. As the "How-To" box below shows, the jig starts with a base that attaches to the drill press from below. This base has a hole for recessing the sanding drum below the surface. A fence that clamps to the base has a pivot block glued to it. This makes it easy to sand the curves to a consistent thickness.

With the setup in place on the drill press, I used a 100-grit sleeve on the drum to smooth the inner curve (Figure 5). As a final step, a random-orbit sander and some fine grit-paper will bring the concave face of the slat to a finish-ready condition.

FINAL SIZE. As I mentioned earlier, all the slats are longer than needed and now's the time to cut them to their final length (Figure 6). The finished result is a smooth and stable curved slat that's ready for your project. W

How-To: SANDING DRUM JIG

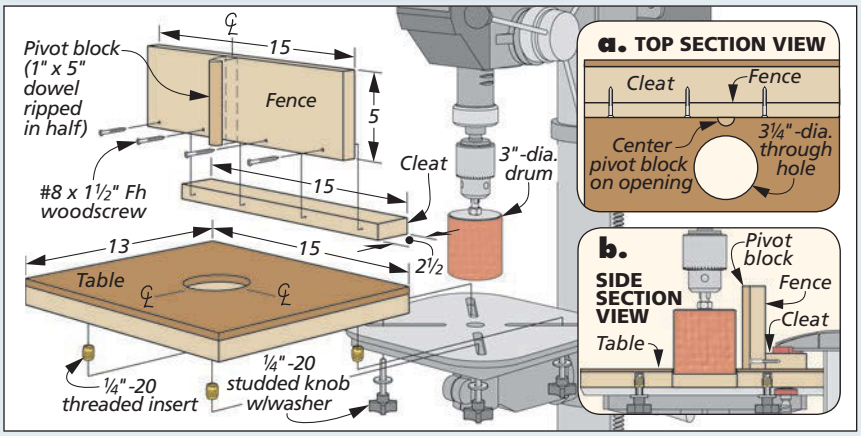

Weekend Project

flip-down Coat Rack

Sporting a mid-century vibe, this coat rack is one part wall art, one part handy place to park your jacket, or hat.

If you're looking for a quick project, but not in the mood to go shopping for a pile of lumber and hardware, this little coat rack fits the bill. In fact, there's a good chance that you could use up some of that leftover lumber in the bin. The rack is basically 29 blocks that are tied together with dowels. Five hooks flip down to bring this playful mid-century-style coat rack to life.

CONTROLLED CHAOS. Even though the rack looks a little like a keyboard gone wild, when it comes to putting all this together, don't be too concerned. There's a method to the madness. The blocks all start out as identically sized blanks. Then you trim them to width and length to make six sets of varying-sized blocks. Some of those you flip to make an interesting overall arrangement.

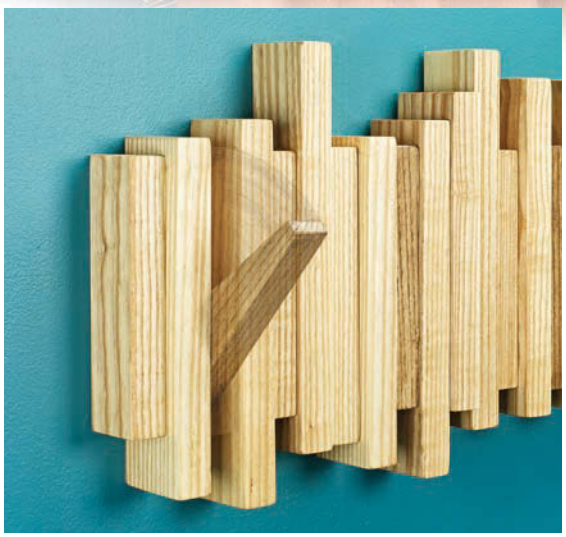

▲ There are five retractable hooks nested within the body of the rack. They're attached to the rack with metal pins that allow you to flip them up and out of the way when not in use.

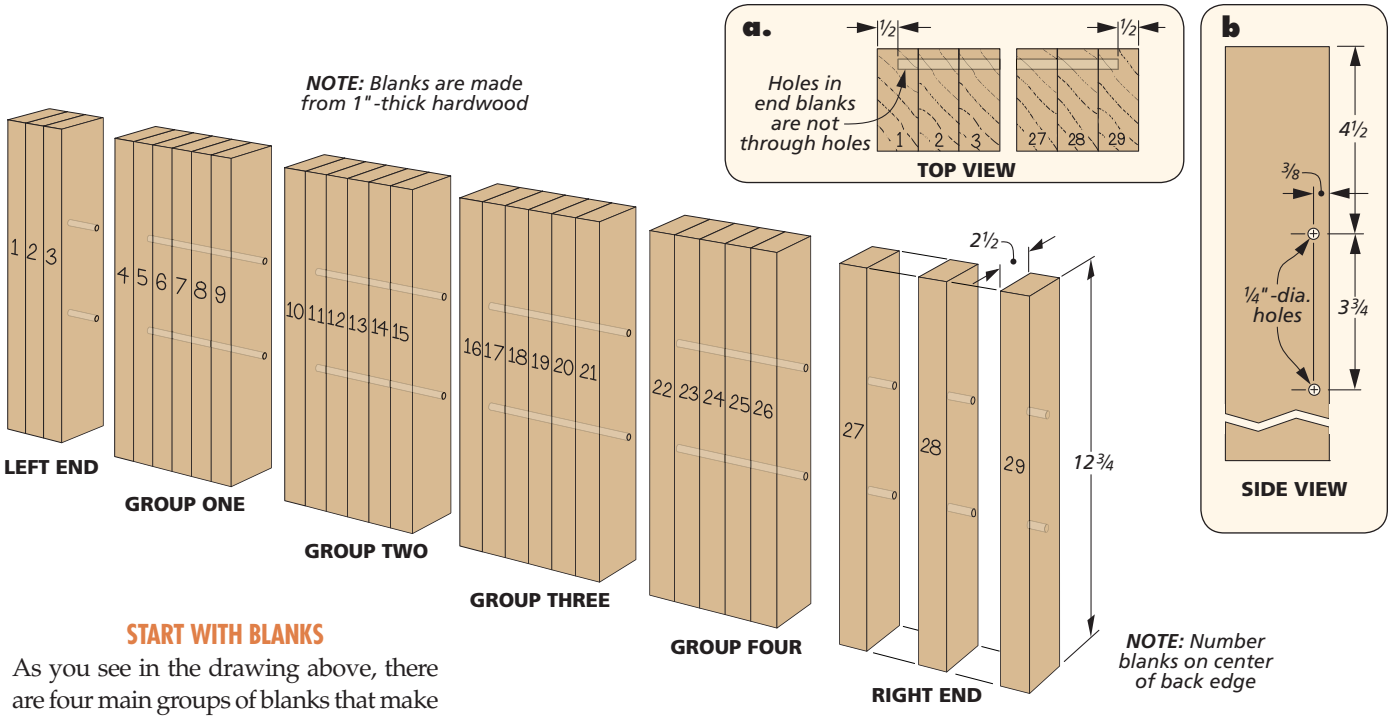

START WITH BLANKS

As you see in the drawing above, there are four main groups of blanks that make up the body of the rack. On either side of these groups are the ends. Both of the end groups consist of three blanks. You may have noticed that the fourth group has only five blanks. This is for the sake of visually balancing the hooks. No worries, though, it will become clear later.

PREPARING THE BLANKS. As I mentioned earlier, the rack starts out as 29 identically sized blanks. Aside from cutting the blanks to size, the only other thing to do at this point is drill a pair of holes in each blank. These holes will eventually house dowels that tie all the blocks together. Drilling the holes first is the key to maintaining the relationship of the blocks, even after they're cut to final size. This design safety net takes some of the worry out of assembling the rack.

GROUPS ARE GOOD. That being said, start by grouping and numbering the blanks. This will save confusion and headaches down the road. The drawing above shows the numbers centered on the front of each blank. But in reality, it's best to number them on the back. In a little while, you'll be ripping most of the blocks to different widths and cutting them to varying lengths. By numbering the back edge of the blanks, you don't have to worry about trimming away any of your numbers.

Drilling the holes is a straightforward process. As Figures 1 and 2 below show, a simple stop block setup guarantees proper location of the holes. If you take a quick look at detail 'a' above, you'll see these are all through holes, with the exception of the two end blocks. Next, you'll turn the blanks into blocks, make some hooks, and start shaping all the parts into a finished coat rack.

How-To: DRILL DOWEL HOLES

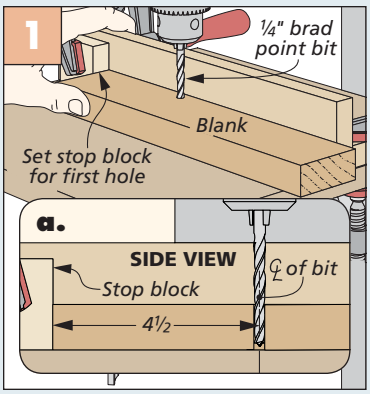

Drill First Hole. Drill through holes in all of the blanks except the two end blanks.

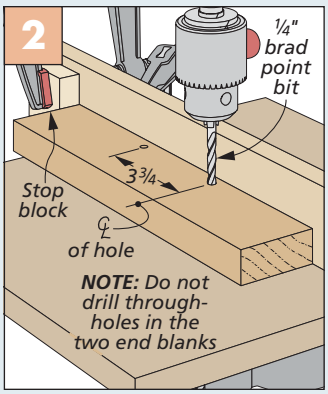

Drill Second Hole. After repositioning the stop block, drill the second hole.

Materials, Supplies & Cutting Diagram

A Blocks (5) 1 x 2 1/2 - 9
B Blocks (7) 1 x 2 3/8 - 10
C Blocks (3) 1 x 2 1/4 - 11
D Blocks (3) 1 x 2 1/8 - 8
E Blocks (6) 1 x 2 - 7
F Blocks (5) 1 x 3/4 - 6 3/4
G Hooks (5) 1 x 1 7/16 - 7 5/16

- (6) 2" Z-clips
- (6) #8 x 3/4" Fh Woodscrews
- (1) 1/4"-dia. x 15" Steel Rod
- (2) 1/4"-dia. x 36" Hardwood Dowel

1 x 8" - 48" Ash (Four boards @ 1.0 Bd. Ft. Each)

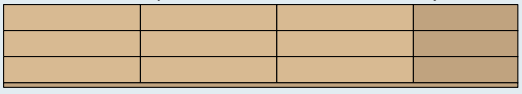

Woodsmith GO ONLINE EXTRAS

For a full-size template of the flip-down hook, go to Woodsmith.com

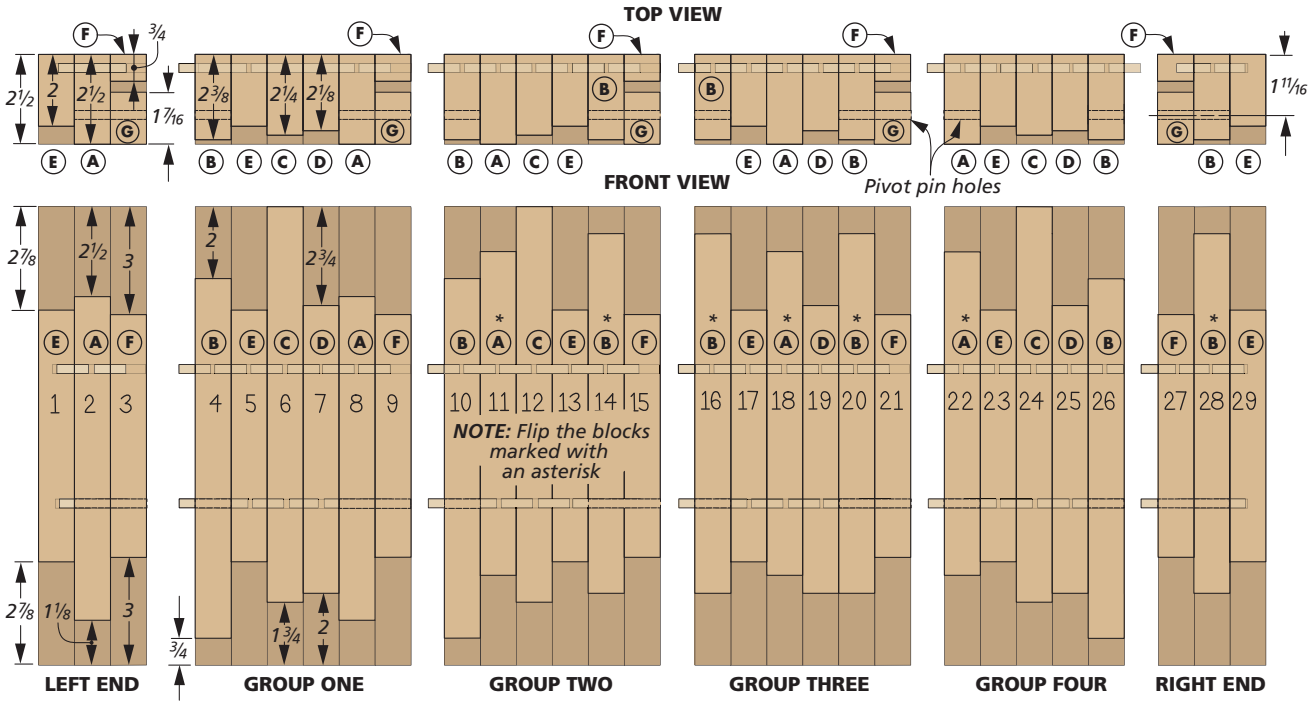

Assembling the COAT RACK

With the blanks arranged and drilled, the next stage of construction is turning them into finished blocks. This involves three steps: ripping the blanks to width, cutting them to length, and flipping certain blocks to achieve the final look of the rack. This isn't difficult if you follow the drawing above. It takes all of the guesswork out of the process. We'll start by ripping the blanks to create the staggered depth of the rack.

RIPPING SEQUENCE. Whenever I have a number of rip cuts to make, I prefer to start with the widest and work my way to the narrowest rip, and that's what I did here. To keep this process orderly, I set up a staging area next to my table saw where I could lay out the groups of blocks exactly as you see them in the drawing above.

To get started, I referenced the top view drawing and noticed that some of the blanks don't need to be ripped. So all of those are labeled 'A.' Then I went for the next size down. I ripped them and labeled them 'B' as I put them back in their place. You get the idea. When it comes to making the last, narrowest set of blocks, don't throw away the waste. Those leftover pieces will be used to make the hooks, so set them aside for the moment.

CROSSCUTS & ARRANGEMENT. Moving on to the next step, Figure 1 below shows crosscutting the blocks with a miter gauge. These cuts create the staggered vertical profile of the rack. The front view drawing above shows how this looks. As with the previous step, I cut each set of blocks to length. As you drop them back into their groups it's time to do some end-to-end flipping. This creates a more "random" appearance without having to make different blocks.

How-To: SIZE BLOCKS & DRILL PIVOT PIN HOLES

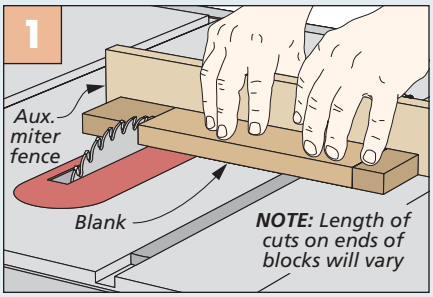

Cut to Length. Each individual block needs to be trimmed to length. Once cut, place it back in its group.

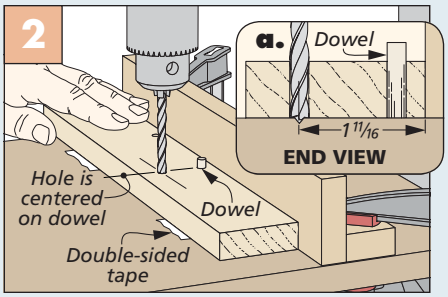

Use Block as Locating Jig. Drill a hole in one of the blocks. Tape the block in place and fit a dowel in the rear hole.

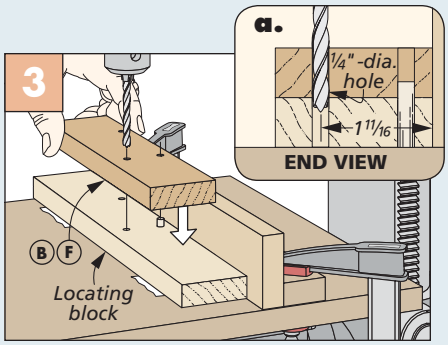

Drill Pivot Pin Holes. Place the blocks that require a pivot hole onto the dowel and drill the rest of the through holes.

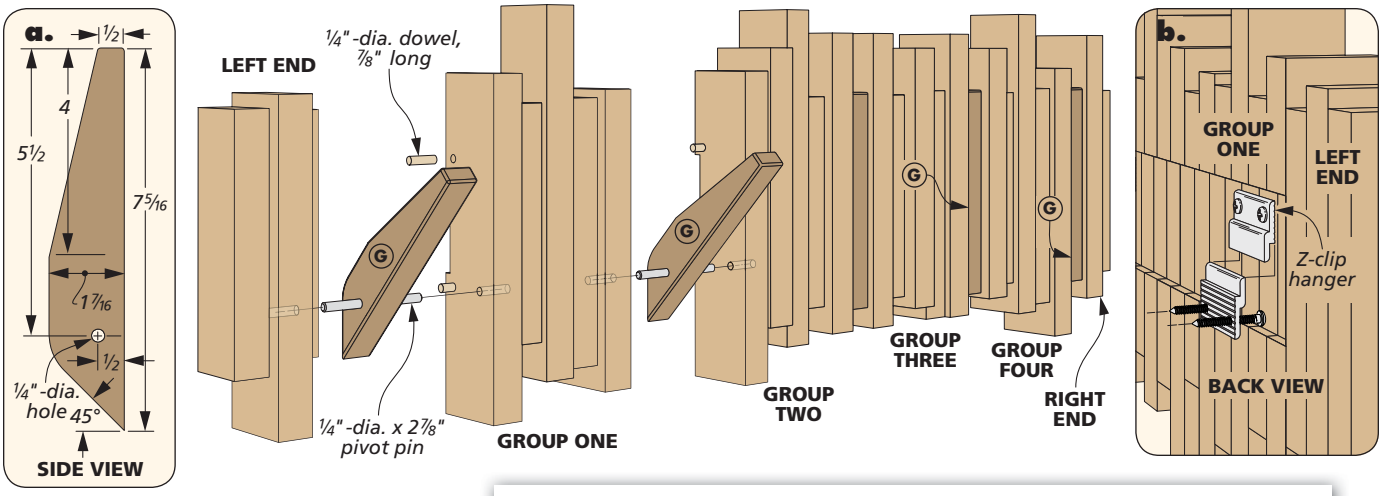

DRILL THE PIVOT HOLES. To finish up the work on the blocks, you have to drill some holes for steel pins. The hooks pivot on these pins. The top view drawing on the previous page shows which blocks need these holes. Figures 2 and 3 on the previous page shows how to locate and drill these holes.

MAKE THE HOOKS

Taking a break from the blocks that make up the body of the rack, it's time to fashion the hooks. Start by sizing the scraps that you set aside earlier (detail 'a' above). After drilling the hole for the pivot pin (Figure 1), cut the 45° angle on the bottom. The long bevel is the next order of business, as in Figure 2.

The main drawing above shows steel pins going through the hooks and into the rack. I used a hack saw to cut these to length from a piece of ¼"-dia. steel rod, and then removed any burrs.

GLUE UP. Gluing up the body is next. Figures 3 and 4 show how to do this. I cut some ⅞" long pins from a section of ¼"-dia. dowel and left ⅜" protruding to join it to the next block. I suggest you apply finish to each group separately before bringing them together.

You can also glue up the two end groups, but hold off on adding them just yet. You'll need to cut a dado in the back of the four middle sections to create a recess for some hanging brackets. Figure 5 shows this.

After installing the last two hooks and gluing on the ends, all that's left to do is mount the rack on the wall. The hardware for hanging the rack draws it snugly to the wall (detail 'b'). W

How-To: MAKE HOOKS & ASSEMBLE HANGER

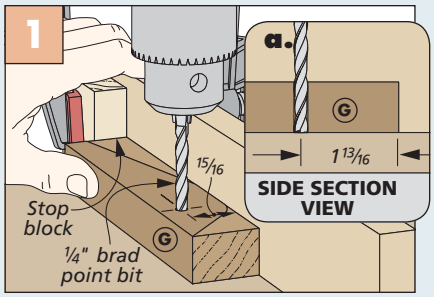

Drilling Pivot Hole. Use a stop block at the drill press to accurately position the pivot hole in each of the hooks.

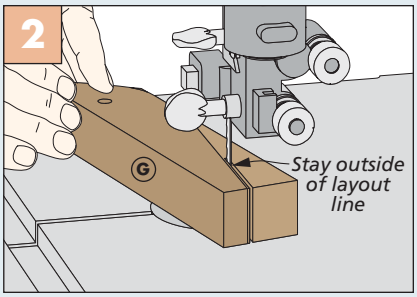

Cutting Long Bevel. At the band saw, cut the long bevel on the hooks. Then sand the surface smooth.

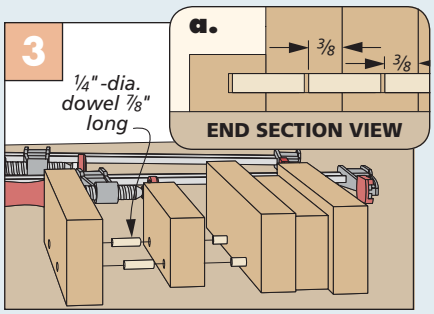

Glue Up Groups. Glue up the groups and ends separately. Dowels are used to align the groups accurately.

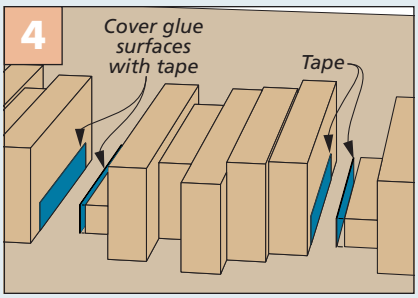

Protect Mating Surfaces. Before adding finish to the groups, use tape to protect the mating surfaces.

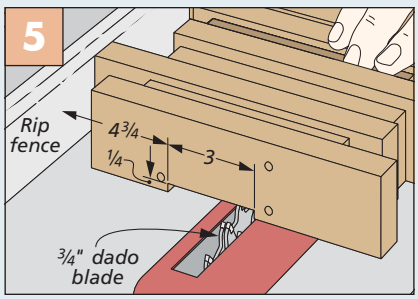

Cut Wide Dado. A dado blade is the best way to cut the wide recess in the back of the four glued-up sections.

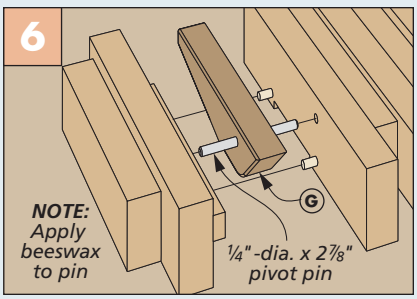

Capping It Off. When gluing and clamping the ends in place, make sure the hooks pivot freely.

Shop Project

hardworking Sawbench

The no-nonsense usefulness of a sawbench in the shop can't be overstated. Making a pair of them merely multiplies the benefits.

▲ The well in the top and the shallow tray underneath provide plenty of space to keep your must-have tools and supplies at the ready.

Sawbenches have been used by craftsmen for centuries. These short work supports were originally intended to aid in the cutting of wood using a handsaw. And while they're fully capable of handling this task, this splayed-leg design gives the bench even more flexibility to aid in several other tasks, as well.

HANDSAW WORK. With a wider top and shorter stance than a sawhorse, a sawbench is appropriately sized so that you can kneel on a board to provide clamping pressure, as shown above. And the ripping notch on one end allows a workpiece to be fully supported during long rip cuts.

BONUS WORK. Beyond these basic functions, a sawbench (or better yet, a pair of them) can also be used as a general assembly station or as finishing supports. A tray keeps tools close at hand, while a well in the top holds smaller items. A thick top with dog holes provides

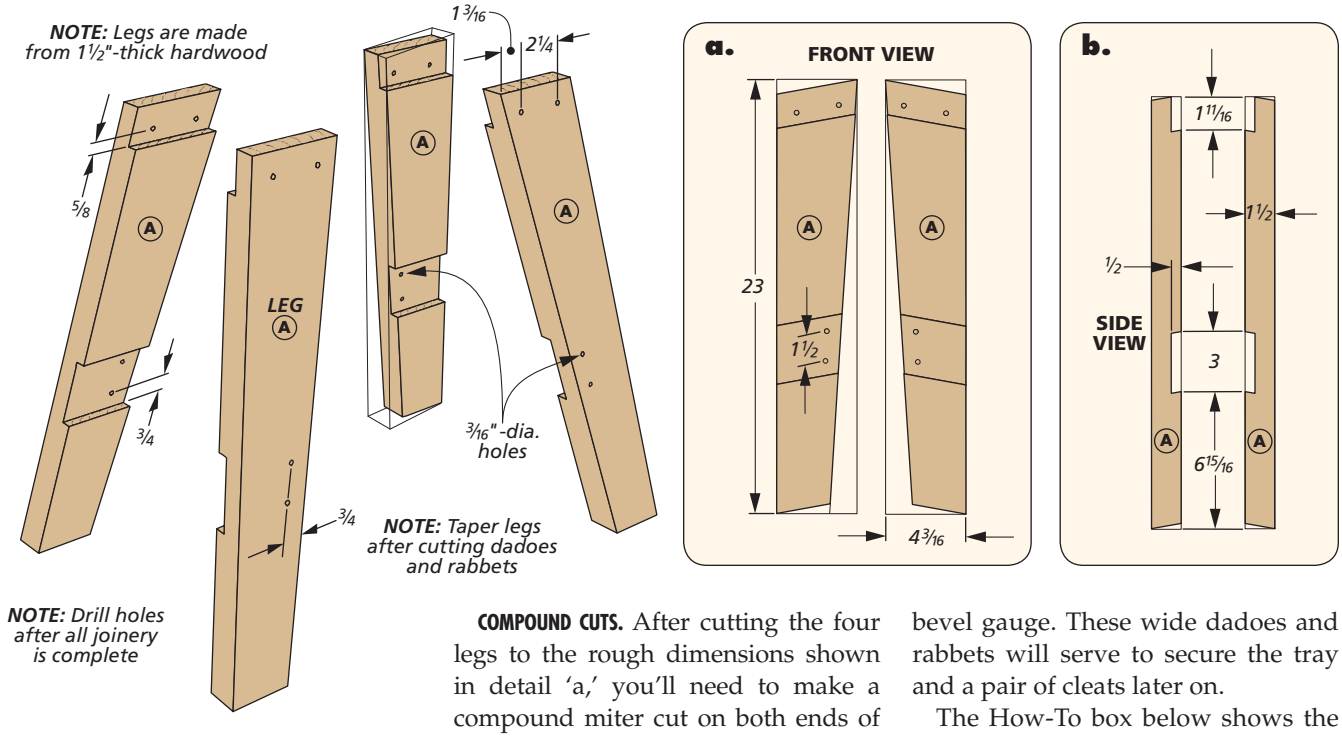

multiple clamping options. Best of all, you can knock out a pair of these benches during a pleasant weekend in the shop.

LEGS FIRST

The sawbench construction starts with two pairs of mirror-image legs. Since I intended to paint my sawbenches, I opted to make them from poplar. But they could just as easily be built from common "two-by" stock. The drawing above provides the information for how the legs are laid out.

COMPOUND CUTS. After cutting the four legs to the rough dimensions shown in detail 'a,' you'll need to make a compound miter cut on both ends of each one. These cuts are what give the bench it's splayed-leg stance that I mentioned earlier. To see a full explanation on how to make compound miter cuts at the table saw, check out the article on page 62.

WIDE DADOES & RABBETS. With the cuts on the ends of the legs complete, you'll want to label each mirror-image pair to keep them organized for the next operation. You can then lay out the positions of the dadoes and rabbets on the inside face of each leg using a bevel gauge. These wide dadoes and rabbets will serve to secure the tray and a pair of cleats later on.

The How-To box below shows the process for making these cuts. With the table saw blade tilted 10° and the miter gauge rotated 10°, make three cuts on each leg to establish the shoulders of the dado and rabbet (Figure 1). You can then switch to a dado blade to clean up the rest of the waste, as shown in Figure 2.

GRADUAL TAPERS. To finish up the legs, cut the tapers along the inside edge of each leg. I made these cuts at the band saw and cleaned them up with a sanding block (Figure 3). You can then drill all of the screw holes.

How-To: SHAPE THE LEGS

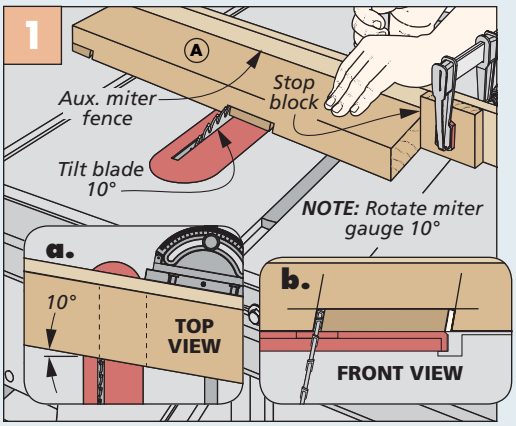

Shoulders. Three cuts establish the shoulders for one pair of legs. Rotate the miter gauge 10° in the other direction for the other legs.

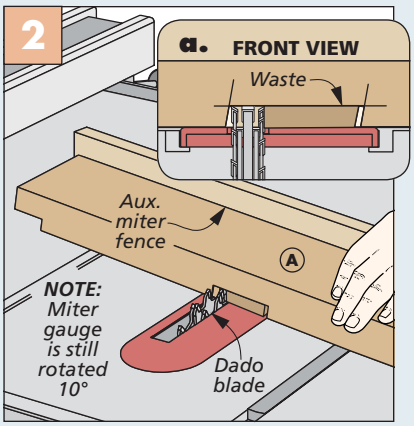

Remove Waste. A wide dado blade makes quick work of removing the rest of the dado and rabbet waste.

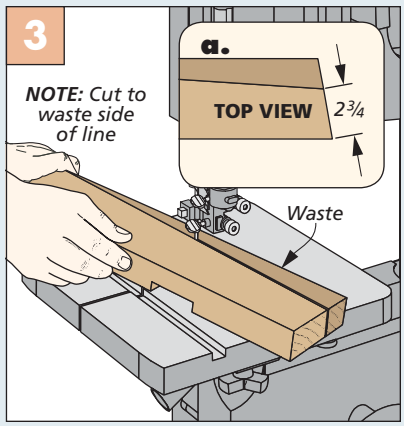

Tapers. At the band saw, cut the taper on each leg. Clean up the blade marks with a sanding block.

adding the TRAY & TOP

While the freshly completed legs form the foundation of the sawbench, the next steps add the working surfaces — namely the tray and the top. The top consists of thick, edge-glued stock and is the main focus of the bench. It has a ripping notch on one end and dog holes along one edge that allow for multiple clamping positions.

The tray below is constructed using simple joinery. But when attached to the legs, it helps to tie the sawbench together and provide the needed stability to support a heavy load. It's also a handy location for keeping tools and supplies close at hand. The bevel along the outside face of the rails matches the angle of the legs for a flush fit, as shown in detail 'b' at right.

TRAY PARTS. Just like the legs, the tray rails are made from thick hardwood lumber. A piece of plywood serves as the tray panel. You'll begin by cutting the four tray rails to size.

The two short rails have rabbets along the ends. These rabbets serve to capture the long rails and hide their end grain from view after assembly. A quick trip to the table saw knocks these out in short order (Figure 1).

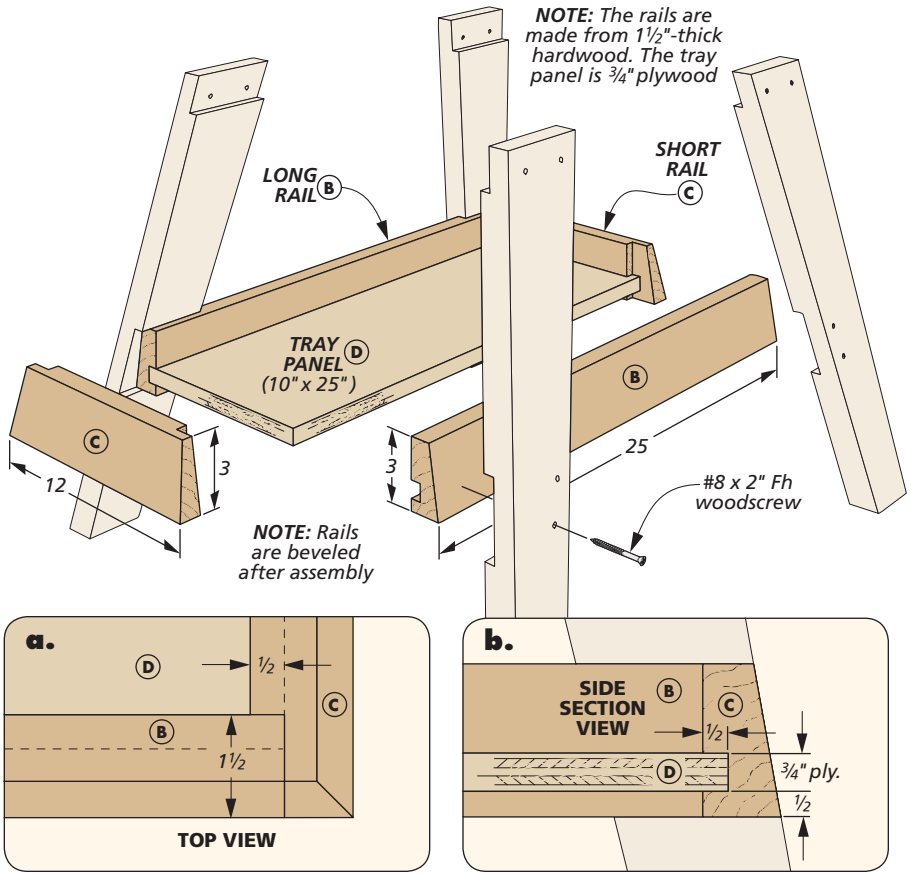

With the same dado blade still in the table saw, cut the grooves along the inside face of all four tray rails, as shown in Figure 2, below. These grooves trap the plywood tray panel. You can then cut the panel to size and assemble the tray with glue and clamps.

WIDE BEVELS. After the glue dries, the final step is to bevel the outside perimeter of the tray assembly. I did this at the table saw with the assembly positioned upside down on the table. Tilt the blade 10° and use the rip fence as a guide for the long edges (Figure 3). Then switch

How-To: MAKE THE TRAY

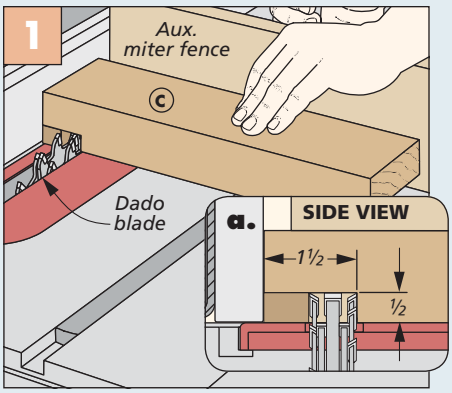

Rabbet Short Rails. Use a wide dado blade to cut the rabbets in the ends of the short tray rails.

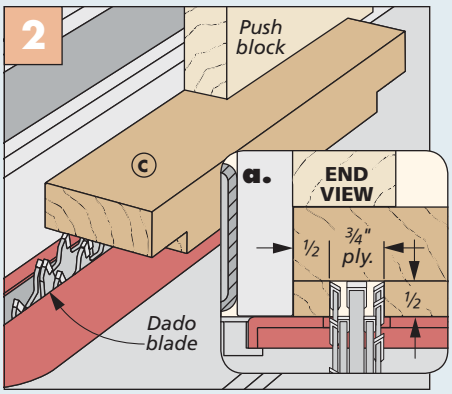

Tray Grooves. A dado blade makes quick work of the grooves in all four tray rails to hold the tray panel.

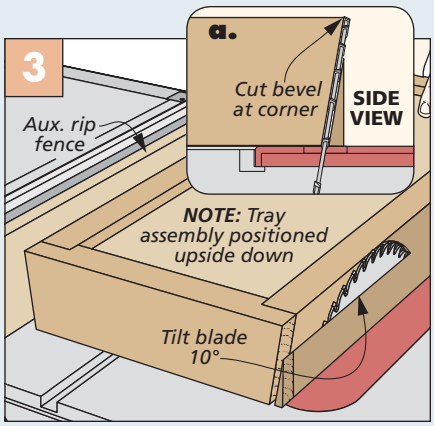

Bevel Sides. Tilt the table saw blade 10° and bevel the outside perimeter of the completed tray assembly.

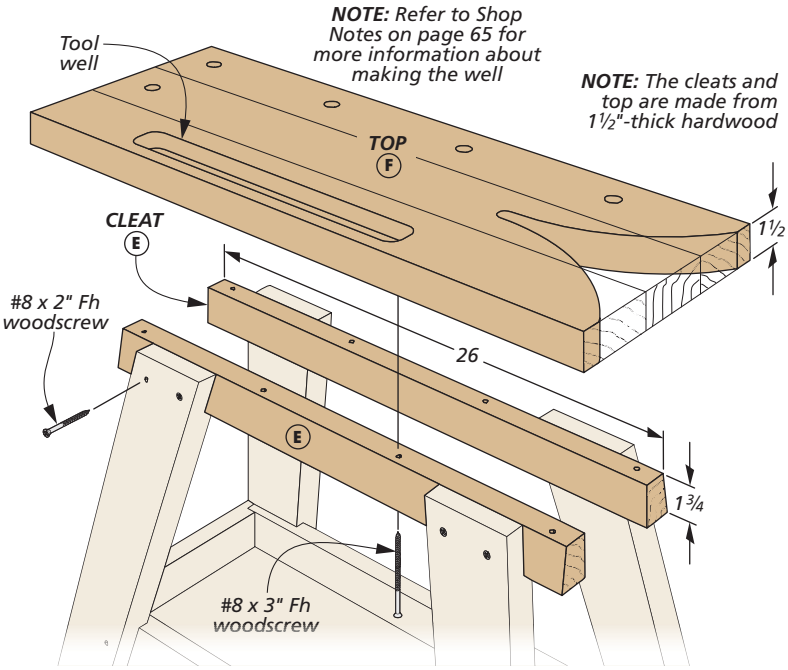

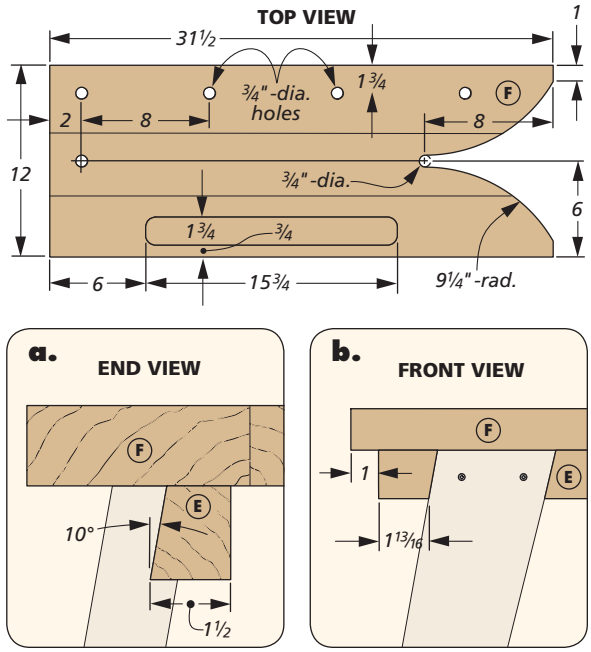

to the miter gauge equipped with an auxiliary fence to bevel the short ends. Sand the surfaces smooth before screwing the legs to the tray (detail 'b').

A WIDE TOP

To cap off this project, you just need to add a top. It's held to the base of the bench with a pair of cleats. Like the tray assembly, the cleats are beveled on one edge so they sit in the rabbets at the top of the legs (detail 'a').

You'll make these bevel cuts at the table saw, much the same way as the tray rails. It's then just a matter of drilling the mounting holes for attaching the top and then screwing the cleats in place to the legs. Their side-to-side position is shown in detail 'b,' above.

SOLID WORKSURFACE. The top is the final piece. I edge-glued three narrow boards together for mine. It then needs to be ripped to width and the ends crosscut to arrive at the finished length.

RIPPING NOTCH & DOG HOLES. Forming the ripping notch starts by accurately laying out the curved lines on one end of the top, as shown in the drawings above. I then drilled a ¾"-dia. hole to establish the inner radius of the notch. While I had the ¾" drill bit out, I completed the five dog holes, as well. You can then cut the two curves at the band saw and sand them smooth.

STORAGE WELL. A shallow well along one edge of the top provides a convenient place to store small items. To rout the well, I made a simple MDF template for guiding a bowl and tray bit, as shown at right. Shop Notes on page 65 provides more detail about this process.

With the well finished, place the top upside down on a flat surface. Set the base in position and drive screws through the mounting holes in the cleats into the underside of the top.

Now that it's complete, check out the article on page 54 to see a few ways to put this sawbench to work. And for information on the paint color I selected for my sawbenches, turn to Sources on page 67. W

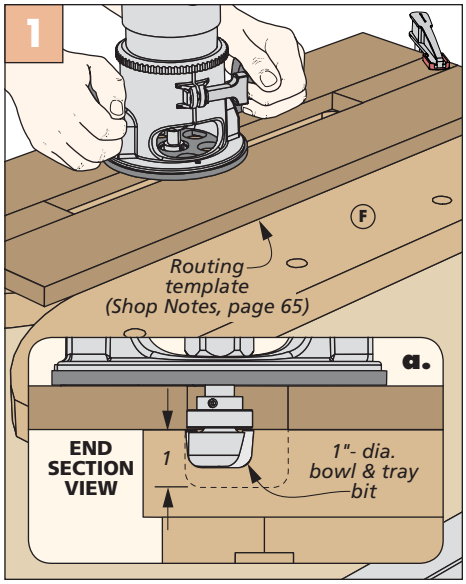

Materials, Supplies & Cutting Diagram (One Sawbench)

A	Legs (4)	1½ x 4¼ - 23	E	Cleats (2)	1½ x 1¾ - 26
B	Long Rails (2)	1½ x 3 - 25	F	Top (1)	1½ x 12 - 31½
C	Short Rails (2)	1½ x 3 - 12	•	(16) #8 x 2" Fh Woodscrews	
D	Tray Panel (1)	¾ ply. - 10 x 25	•	(8) #8 x 3" Fh Woodscrews	

1½"x 5½" - 84" Poplar (Two Boards @ 6.4 Bd. Ft. Each)

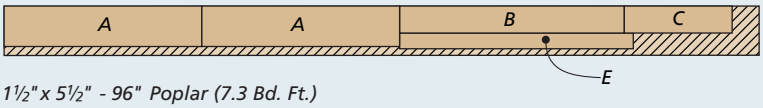

1½"x 5½" - 96" Poplar (7.3 Bd. Ft.)

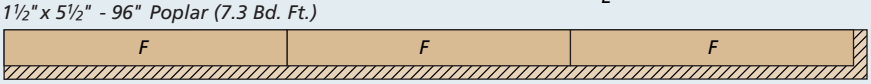

ALSO NEEDED: *One 24"x 48" sheet of ¾" birch plywood*

Outdoor Project

Upscale Martin House

Coopered construction and durable materials combine to create an eye-catching home for these social birds.

Many people get their first taste of woodworking by building a birdhouse. More than likely, it's a simple design knocked together quickly from dimensional lumber and a handful of nails.

With the birdhouse you see here, you can come full circle, literally. This time around, the design offers a few more woodworking lessons. The result is something that's sure to please you, as well as the birds in your neighborhood.

MARTIN HOUSE. The obvious difference in this house is that it's more like a luxury high-rise apartment than a single-family home. The 12 compartments are geared for the needs of purple martins. They live together in large colonies and feed on insects.

A 12-unit martin house is definitely on the larger size for birdhouses. But that doesn't mean it should be heavy. I used lightweight (but strong) cypress and a coopered construction to form the round shell. Round balconies and a perch rail wrap around each of the three levels.

Inside, ¼" exterior-grade plywood makes up the floors and walls. There's also a unique ventilation system to keep the compartments dry and cozy.

To cap things off, the overhanging roof offers up a few challenges for making the parts and then gluing them up into a solid, water-tight assembly.

▲ At the end of the season, you can easily clean out the martin house. Simply swivel the brass turn buttons to remove the door on each compartment.

Construction Overview / *OVERALL DIMENSIONS: 31"-dia. x 39¾"H*

You can turn your own finial or purchase one

Roof panels are joined with splines

Bead trim covers roof joints and adds detail

***NOTE:** Martin house features 12 compartments on three levels*

Woodsmith GO ONLINE EXTRAS

For the finial pattern and post plans, go to Woodsmith.com

***NOTE:** Central column slips easily over a 4x4 post for mounting and features ventilation holes*

Balconies consist of four sections joined by splines

Notches help provide air flow to compartments

Exterior consists of coopered staves

Perch rails are made from aluminum tubing

Removable doors provide access to clean out the martin house

Balconies are joined with splines

Balconies and perch rails supported by dowels

Hole in door is sized to match preferences of purple martins

***NOTE:** For hardware sources and paint information, turn to page 67*

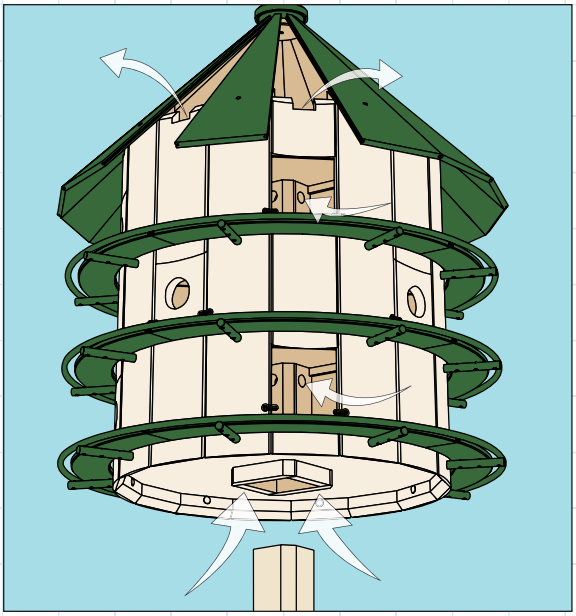

Airflow. To keep the compartments dry, holes in the column and a chamfered post allow air to flow up from the bottom and out through notches cut in the the top of the staves.

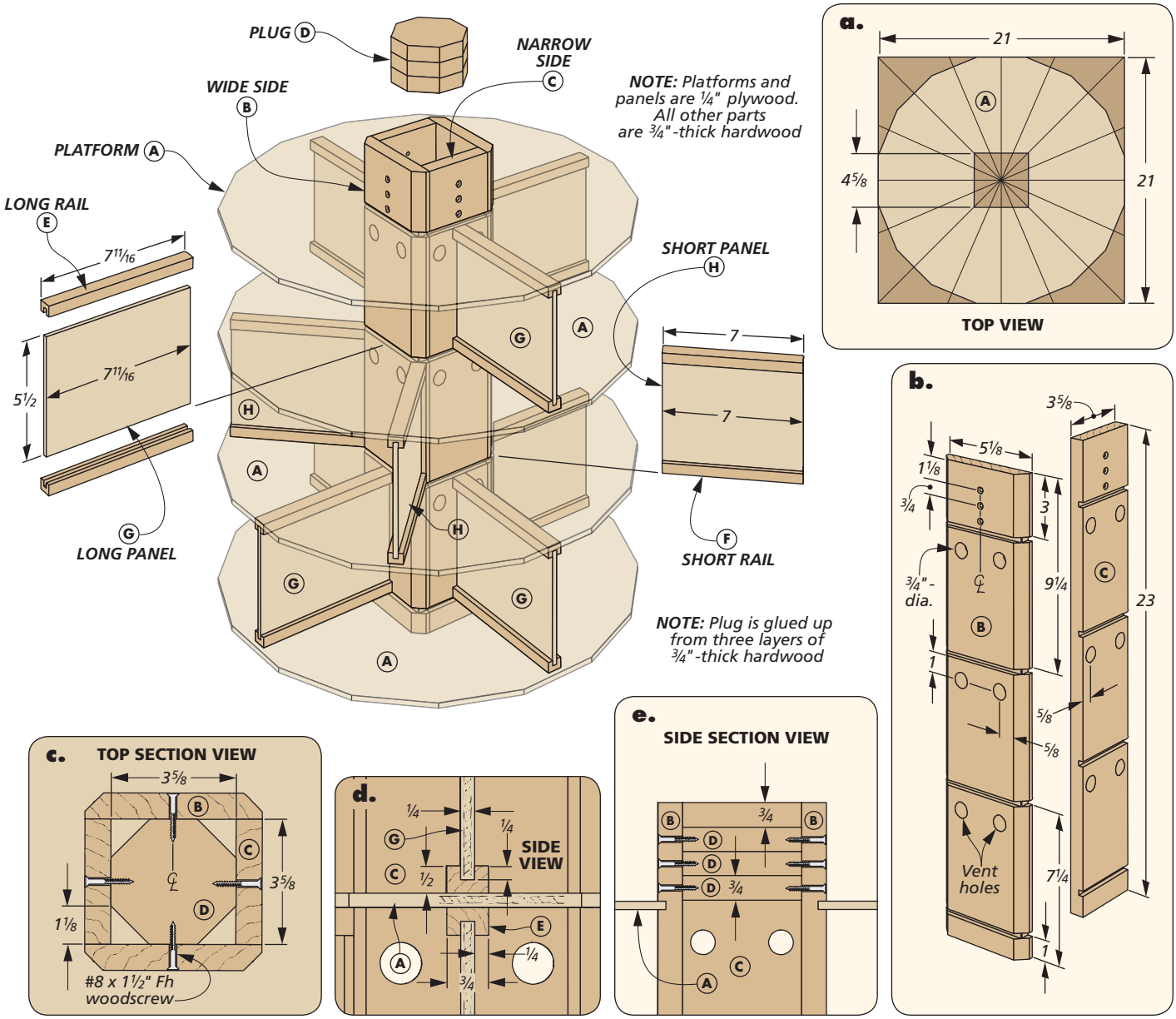

Start from the **INSIDE**

The inside structure of the martin house forms the first component to make. It's comprised of four plywood platforms that wrap around a central column. This framework holds the wall assemblies. A thick plug rounds out the interior.

PLATFORMS. The platforms are made from 1/4" exterior-grade plywood to save weight. However, once the house is glued up, it's still quite rigid. In order to get the round outside shape, the platforms are cut with 16 equal sides.

You want all four platforms sized consistently. Approach this in several straightforward steps. To begin with, cut the four platforms into 21"-square blanks, as in detail 'a' above. For the next steps, stack the platforms together and secure them with double-sided tape.

MAKING 16 SIDES. In order to create 16 sides from a square blank, you need to first do some layout work. Locate the center of the platforms by drawing intersecting lines from corner to corner. This divides the blanks into fourths.

After finding the center of each side, draw another pair of lines to create eight sections. The final bit of layout is to bisect the angle of each section and draw four more lines to reach 16.

With the blanks marked, it's time to cut them to the correct shape. For that, I turned to the table saw sled shown on page 66. A hole in the blanks fits over a pin on the sled. A reference line on the sled allows you to trim the blank to size simply by aligning the lines and making a cut, as in Figure 1 on the next page.

Wrap up the work on the platforms by cutting a square hole, as in detail 'a.' I used the center hole to insert the blade of a jig saw to remove most of the waste.

The final trimming can be done with files and a sanding block.

CENTRAL COLUMN. The column comes next. Its four parts join the platforms to create the three "floors" of the martin house. The column also creates a mounting socket for installing the house on a tall post. Detail 'b' on the previous page shows what you're aiming for. Then follow along in Figures 2, 3, and 4 at right for the steps to get there.

In order to get an ideal fit in the platforms, I sized the narrow column sides a little extra wide. Just before assembly, trim them so they're snug with the wide sides once installed in the platforms.

I want to add a word about the ¼" dadoes shown in Figure 2. More than likely, the plywood platforms will be a loose fit in these dadoes. So when it comes time to assemble the platforms and column pieces (Figure 5), be sure to register the platforms against the lower edge of the dadoes. This consistency pays off later when it's time to make and attach the outer staves.

COLUMN PLUG. A thick plug at the top of the column seats against the top of the mounting post. It's glued up from three layers of hardwood, as you can see in detail 'e.' Before attaching it to the column with screws, trim the four corners, as illustrated in Figure 6.

BUILD WALLS. The basic structure of the martin house allows you to focus on dividing each of the floors into four compartments. The walls are three-piece assemblies consisting of two rails and a plywood panel, as shown in the drawing on the previous page.

Take care to note the arrangement (and location) of the walls on each level. The wall assemblies on the upper and lower floors are centered on the wide sides of the column. In contrast, the middle floor walls butt against the chamfered corners. This means there are two different lengths for the rails and panels.

I marked centerlines on the column and added some to the platforms to align each pair of rails. After cutting a groove on one edge (Figure 7), glue them in place with spring clamps.

Making the wall panels comes down to cutting them to fit between the rails. They simply slide into place (Figure 8).

How-To: SHAPE THE PLATFORMS & COLUMN

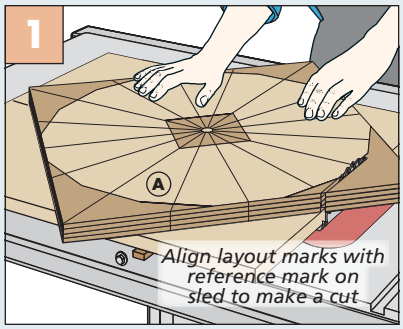

Platform Sides. Use a table saw sled (shown on page 66) to cut all four platforms to shape at once.

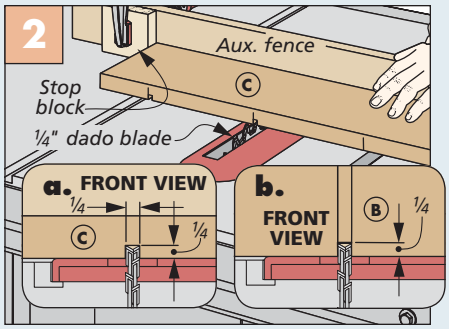

Dadoes. Cut dadoes in the column parts to accept the platforms. The wide sides require dadoes on the edges, too.

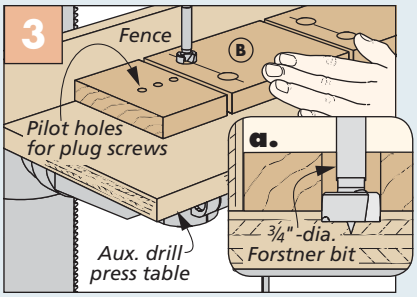

Drill Some Holes. After drilling the screw holes for the plug, drill a pair of ventilation holes at each level.

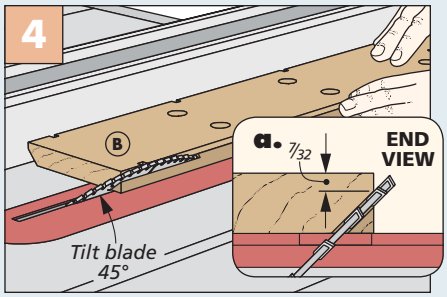

Chamfers. Angle a combination blade to cut chamfers on the wide column sides in a short amount of time.

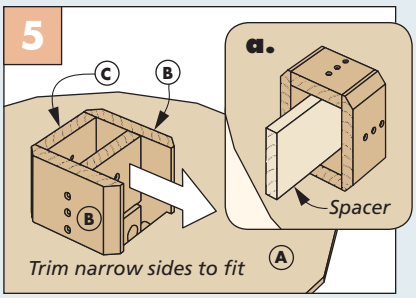

Assemble the Column. Fit the wide sides into the platforms. Use a spacer to hold the narrow sides in place.

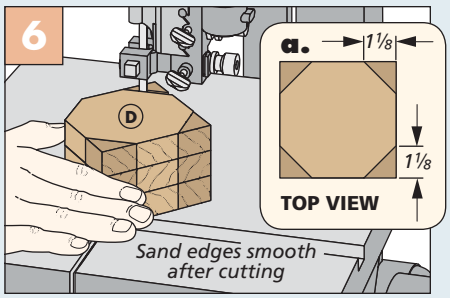

Relieve the Plug. After gluing up the plug, knock off the corners at the band saw to allow air to flow past it.

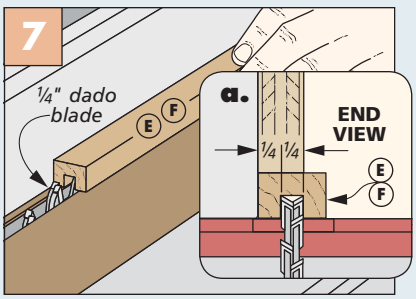

Wall Rails. Cut a shallow, centered groove in all the wall rails with a dado blade to accept the wall panels.

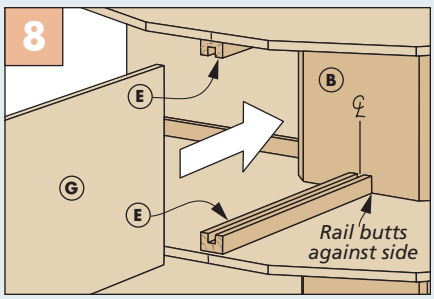

Install the Walls. Once the glue dries on the rails, you can slide the panels in place. Glue isn't necessary here.

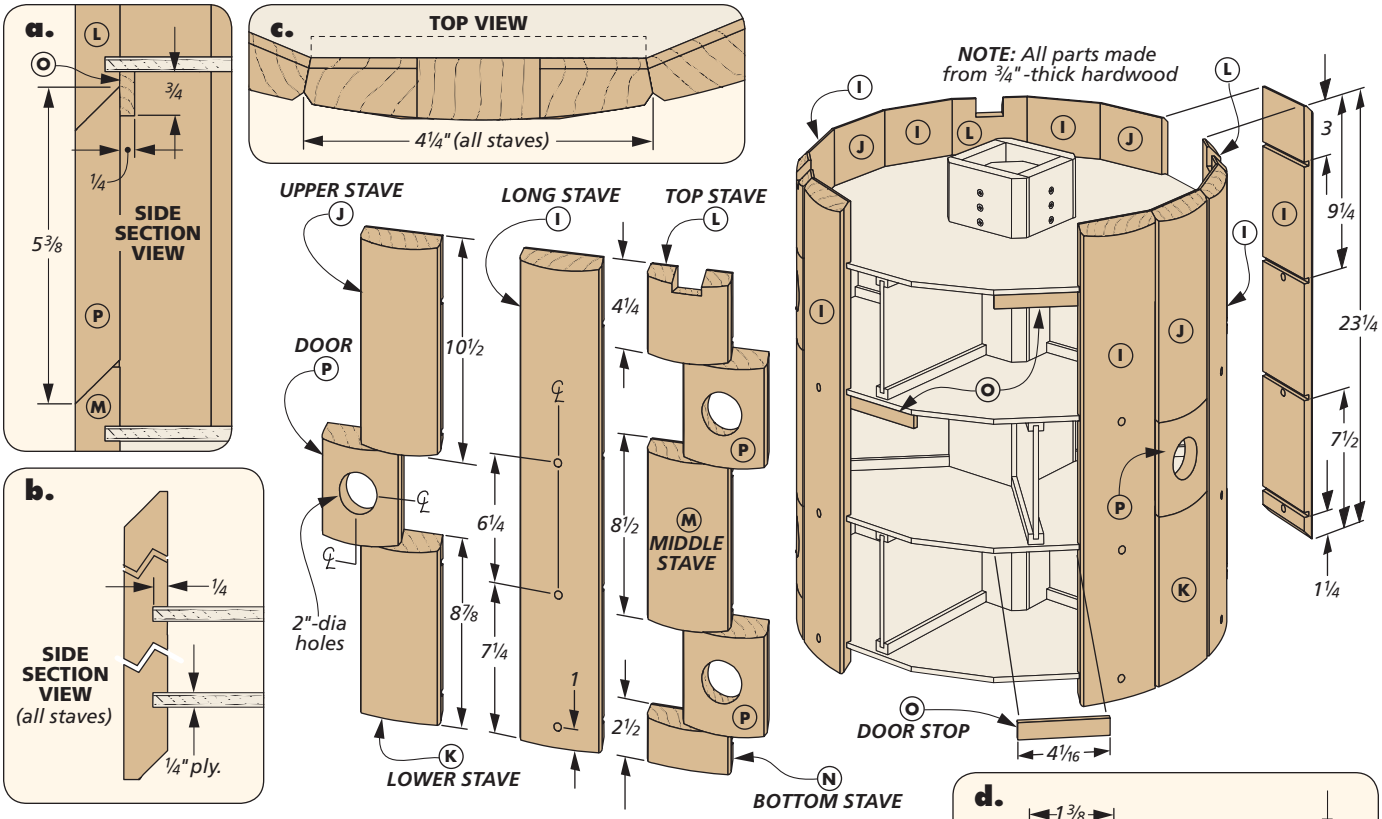

Wrapped with **STAVES**

Staves enclose the martin house and help to give it a round shape. However, the staves aren't all the same. Half of them are cut into two different sets of shorter staves (drawing above). This allows you to offset the openings to each compartment from the adjacent floors.

The openings between sections provide access to clean out the compartments at the end of the season. Removable doors fill the openings and have an entry hole sized for purple martins.

STAVE BLANKS. While the martin house has 16 sides, you need to make a couple extra staves to cut the doors from. The staves start as blanks cut to length and width. You need dadoes on the inside face of the staves to match the platform spacing, as in the drawing above. Use the same dado blade technique as you did for cutting the column sides.

On the eight full-length staves, I drilled holes that hold dowels to support the balconies and perch rails. Then on the staves that become the top staves,

How-To: SHAPE THE STAVES WITH BEVELS

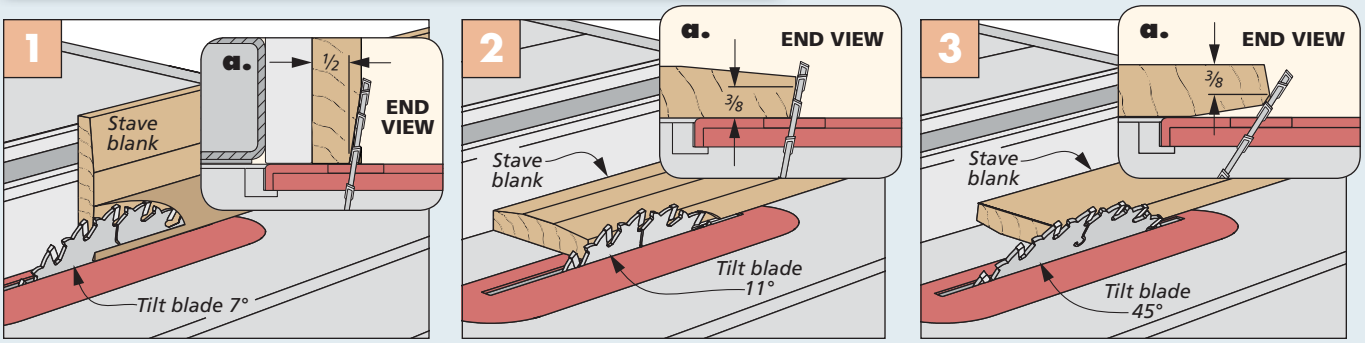

Wide Bevels. Tilt the table saw blade to form wide facets on the outer face on each of the stave blanks.

Then the Edges. The shallow bevel cut on each edge of the staves allow them to fit together tightly.

A Small Chamfer. With the center of the stave flat on the saw table, create a slight chamfer along each edge.

How-To: CROSSCUTTING THE STAVES

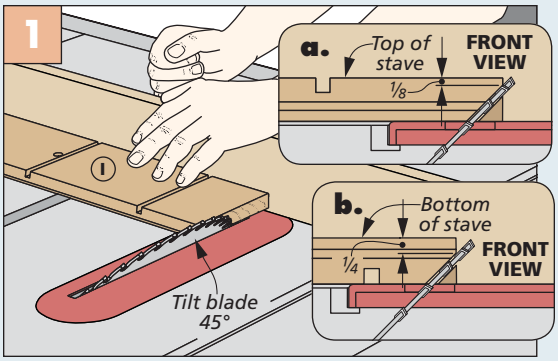

Beveled Ends. The upper end of each stave is beveled on the outside face (detail 'a'). The inside face is beveled at the lower end (detail 'b').

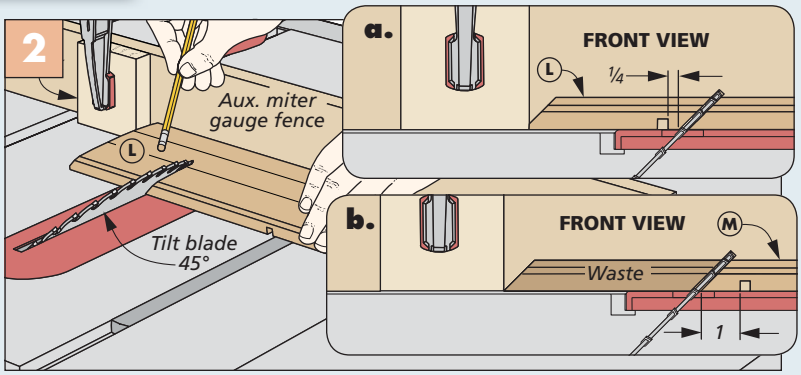

Cut to Length. The key to locating each cut is referencing off the dadoes on the inside face. Using the top stave and middle stave as an example, see how the dado relates to cutting the upper or lower end of each part.

cut a notch that becomes part of the ventilation system, as you can see in detail 'd' on the previous page.

STAVE SHAPING. The box on page 30 picks up the story for shaping the stave blanks. This involves beveling the faces and edges and cutting a chamfer at the table saw. The ends of each stave are beveled, as well (Figure 1 above). Take note here to cut the bevel on the appropriate face, as shown in detail 'b' on the previous page and Figure 1 above.

At this point, I fit the staves to the martin house (without glue) to check the fit. If necessary, trim the edges of the staves with a block plane for a snug fit. Cutting the shorter staves to length comes next. Figure 2 shows the setup. What you're doing is removing the material from each stave where the door will be.

INSTALLING THE STAVES. With all staves in hand, assembling them may seem like putting together a jig saw puzzle while juggling the pieces. The trick is to work methodically and use a slow-setting glue. Figure 1 below shows the pattern. Set the martin house upright on the workbench. I started with a full-length stave installed just to the left of a set of walls on the upper and lower floors. Apply glue to the dadoes and one edge. Then add the next pair of staves. The dadoes and platforms register the staves top to bottom.

Once everything was in place, I applied a few band clamps. When the glue is dry, you can sand the martin house to a round shape.

DOORS & STOPS. The final pieces to make are the door stops and doors (detail 'a' and 'c' on the previous page). The stops keep the doors in place at the top of the opening, as in Figure 2. The doors are cut to size to fit the openings between the staves, as you can see in Figure 3.

How-To: ASSEMBLE THE STAVES & ADD THE DOORS

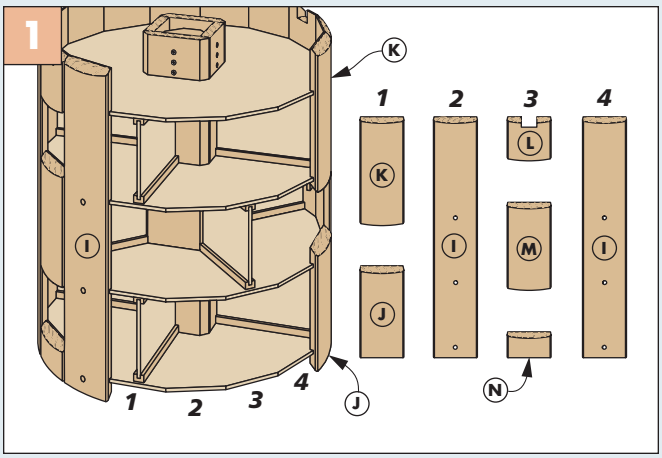

Stave Assembly. Full-length staves alternate with several shorter sections to create an offset pattern of openings for the compartments in the martin house.

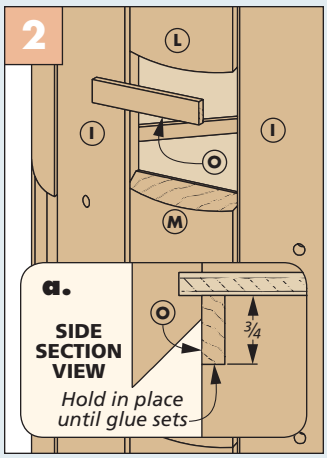

Door Stop. Glue a thin stop just inside each opening for the door to rest against.

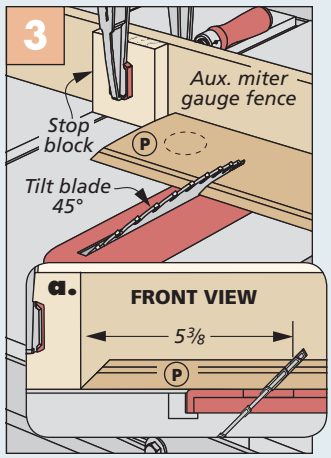

Size the Doors. Bevel the ends of the doors to fit the openings in the staves.

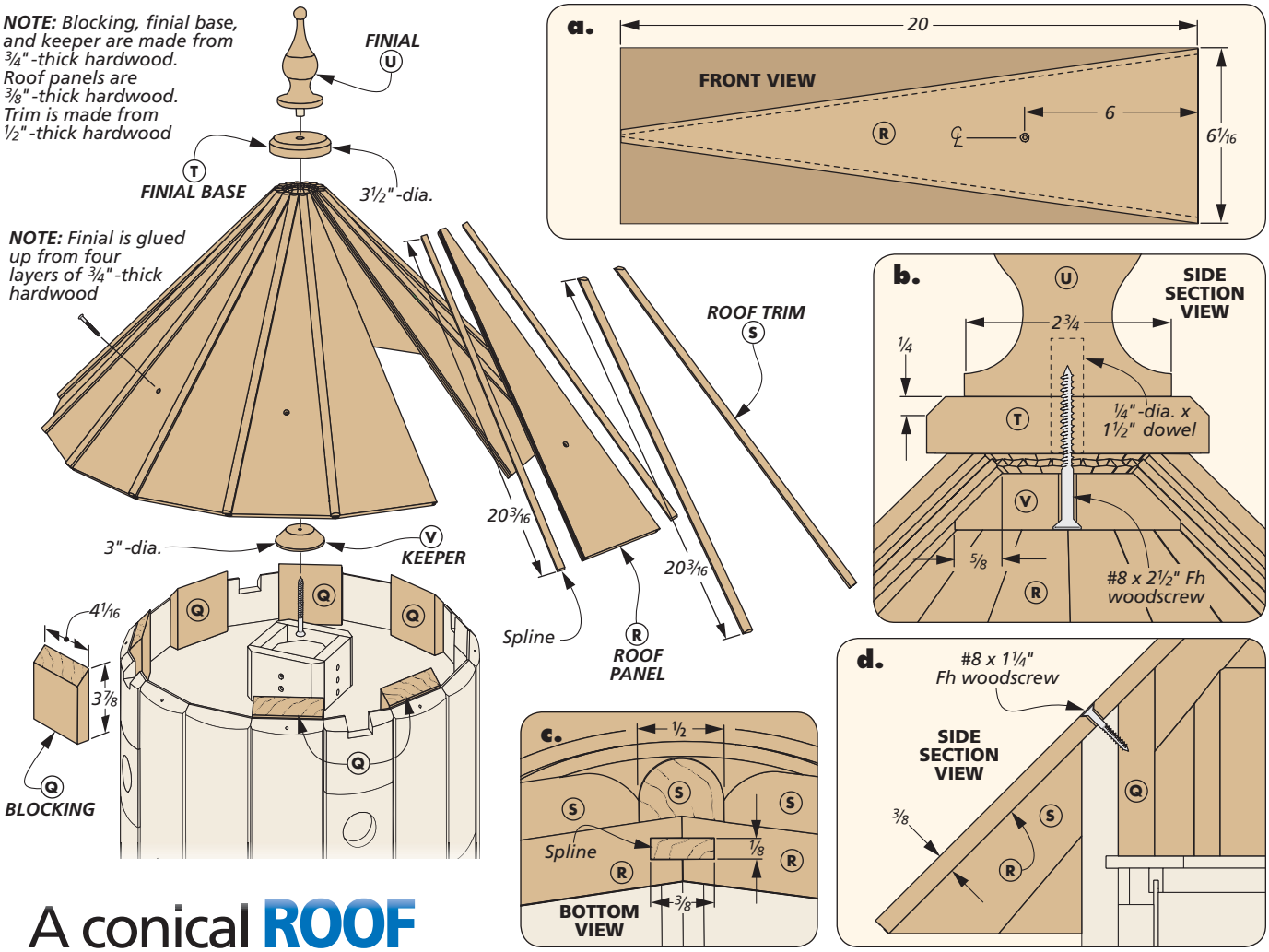

A conical ROOF

Making the roof for the martin house is just as interesting as making the rounded sides. Tapered panels join together to forms a cone shape. Beaded trim pieces and a turned finial add detail to enhance the look. Like before, the challenge lies in getting the parts to align as they wrap around the structure.

ADD BLOCKING. Before getting started on the roof itself, I glued beveled blocking pieces to every other stave around the inside of the top of the martin house, as shown in the drawing above. These pieces provide a thicker backing for attaching the roof with screws (detail 'd').

How-To: CUT TAPERS & SPLINE GROOVES

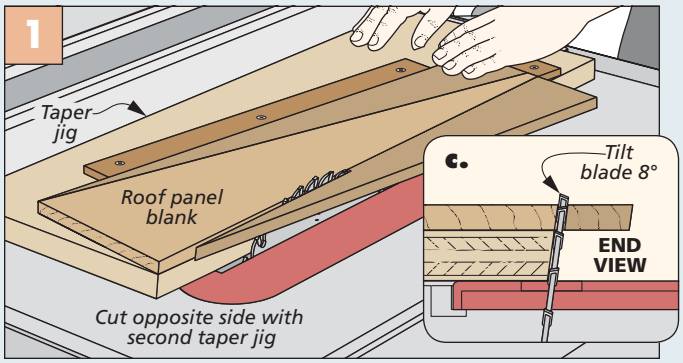

Tapered Roof Panels. Create the tapered roof panels using two table saw sleds (for details, turn to page 66). The saw blade is tilted to create a beveled edge at the same time.

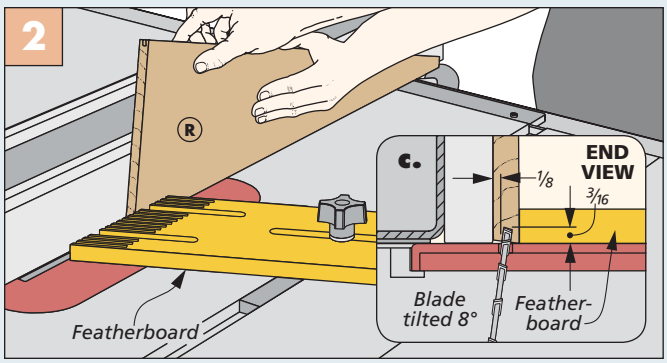

Spline Grooves. Turn the panels on edge with the inside face against the rip fence. Cut a groove on the narrow edge. A featherboard keeps the panel tight to the fence.

ROOF PANELS. The main part of the roof assembly consists of 16 solid-wood panels joined by splines. The edges of the panels are beveled to mate tightly to the adjacent panels. They also taper to form the cone shape. Consistency is the name of the game here.

While making beveled and tapered roof panels may seem complex, it's actually pretty straightforward with the help of a couple table saw sleds (refer to page 66). One sled forms one edge of the panel, and a second forms the other. This is shown in Figure 1 on the previous page.

The roof panels need grooves to accommodate the splines that link the panels together, as shown in Figure 2 on the previous page. The blade is tilted to match the bevels on the panel.

ROOF ASSEMBLY. Gluing and clamping a 16-sided conical roof presents another challenge. My solution is to use the martin house as a kind of form to guide the process. In the box below, Figures 1 and 2 give you the idea and sequence.

You can use the staves to determine the up-and-down position of the roof panels. For now, tack one in place with a finish nail partially driven into a blocking piece. That same dimension is used to drill a nail hole in seven other staves (Later on, you'll replace the nails with a screw.)

Now it's simply a matter of applying glue, inserting a spline, and adding the next panel. I found that after 30 seconds or so, the glue has set up enough to continue adding another spline and panel. Go easy on the glue, so you don't inadvertently glue the roof to the house.

Since you've taken the time to make the roof panels consistent, aligning the upper and lower ends of the panels means the assembly is on track. When all the panels have been added, the glue needs to cure several hours for the strongest bond. Then you can pull the nails and lift the roof assembly off.

ROOF TRIM. Beaded trim pieces conceal the joint lines in the roof, as shown in detail 'c' on the previous page. To fit snugly against the panels, an angled groove needs to be cut on the bottom face of these narrow pieces, as shown in Figure 3 below. The remaining steps are shown in Figures 4 and 5.

FINIAL ASSEMBLY. A turned finial caps the roof assembly. You can turn one yourself using the online pattern or purchase one. The finial is joined to a round base with a dowel, as in detail 'b' on the previous page. The finial is held in place with a round keeper on the inside of the roof. I made both the keeper and base with a wing cutter at the drill press and completed them with a chamfer (Figure 6). Then attach the roof with screws.

How-To: ASSEMBLE THE ROOF

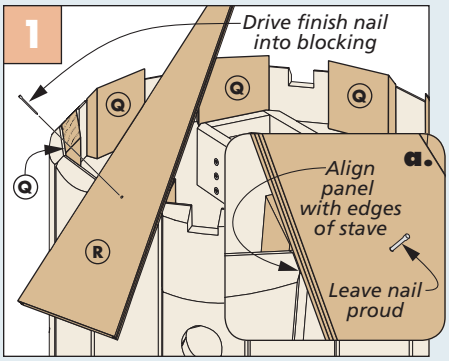

First Panel. Align the roof panel with the edges of a stave and drive a finish nail partially into the blocking piece.

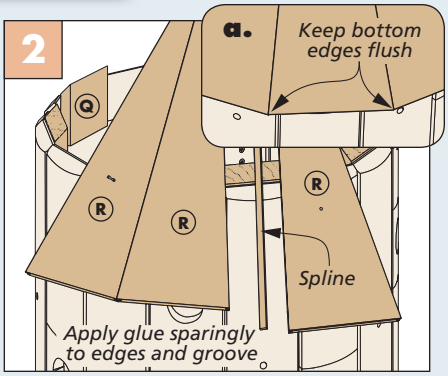

The Process. After adding glue and a spline, fit the next panel in place keeping the ends of each panel aligned.

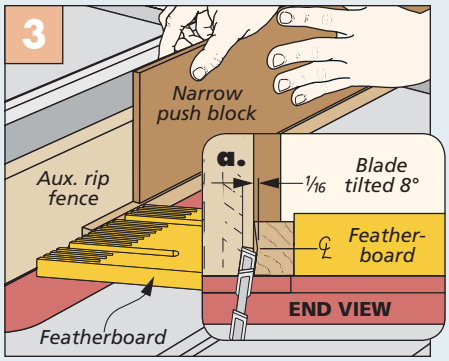

Roof Trim. With the blade tilted and buried in an auxiliary fence, cut an angled recess on each trim blank.

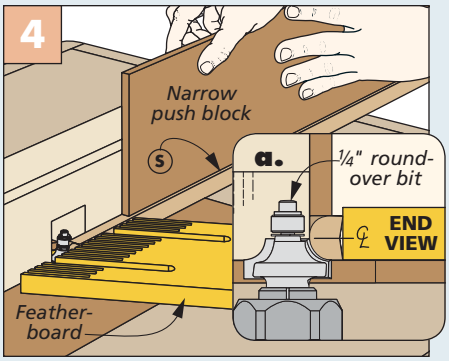

Roundovers. After making a pass along one edge, flip the blank around and make a second pass to create a bead.

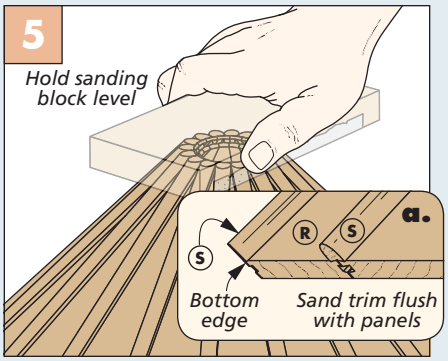

Trimming. A wide sanding block makes quick work of leveling the trim at the top and bottom of the roof assembly.

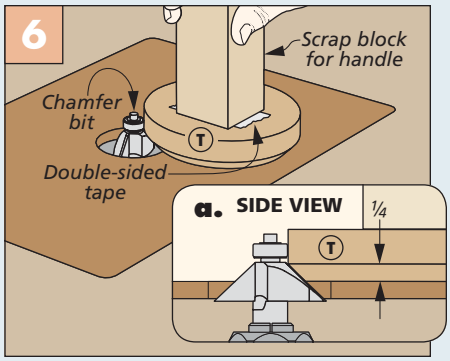

Chamfers. A handle attached with double-sided tape makes it safer to rout a chamfer on the base and keeper.

Wrap-around **BALCONIES**

It's down to the final details on the martin house — the balconies and the perch rails. The martin house requires one at each level, as shown in the drawing at right. As I mentioned earlier, the balconies and rails are supported by dowels installed in the staves.

PAINT & TURN BUTTONS. Before working on the balconies, it's a good idea to paint the house, doors, and roof as separate components. You can find the paint colors I used in Sources on page 67.

The doors are held in place with a pair of small brass turn buttons that are installed on either side of each opening. This is shown in detail 'a.'

BALCONIES. The balconies that encircle each level of the martin house are made from solid wood to stand up to the weather better than plywood. Making the balconies draws on several concepts you've already used on this project.

Each balcony is assembled from four identical pieces joined with splines (like the roof assembly). While the pieces end up with a curved shape, they start as square blanks. The ends are then mitered to create mating faces between pieces.

The box that runs along the bottom of this page and the next detail the remaining steps. The ends of each blank have

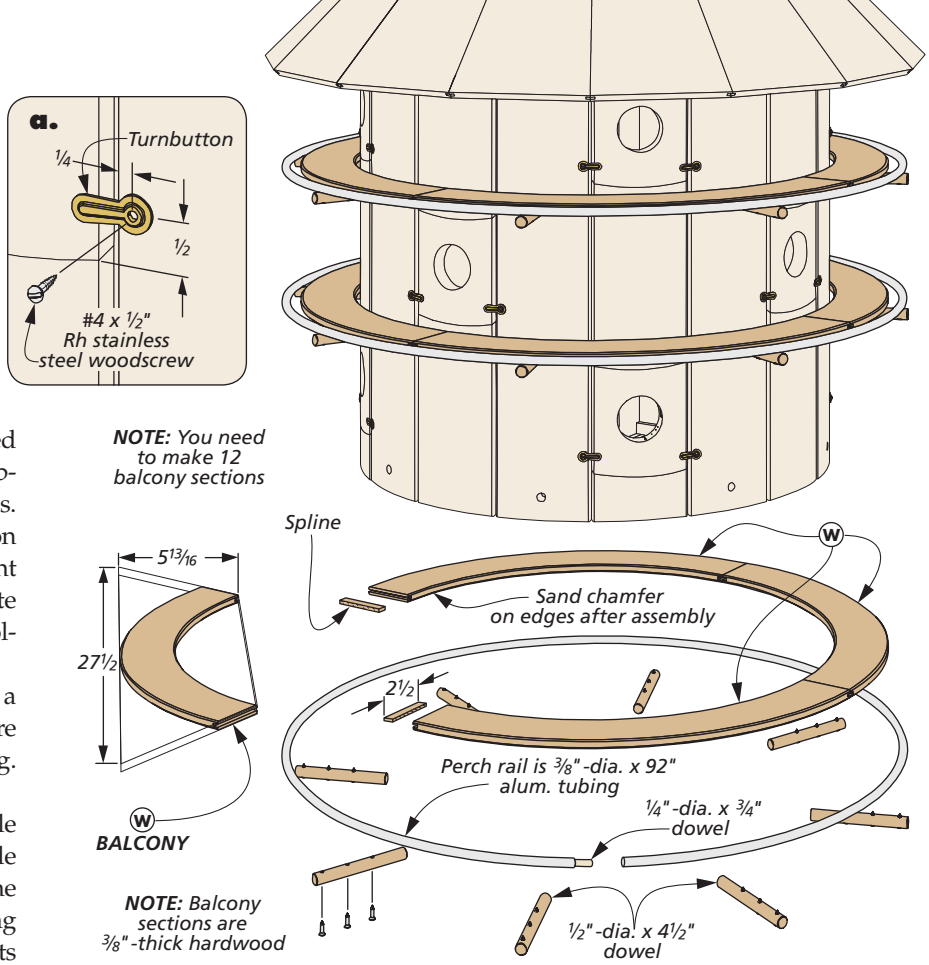

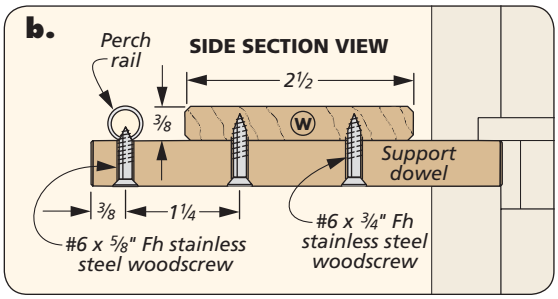

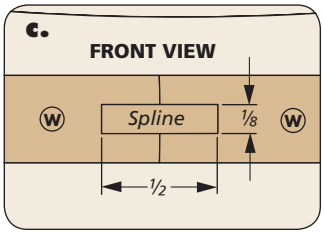

How-To: MAKE THE BALCONIES

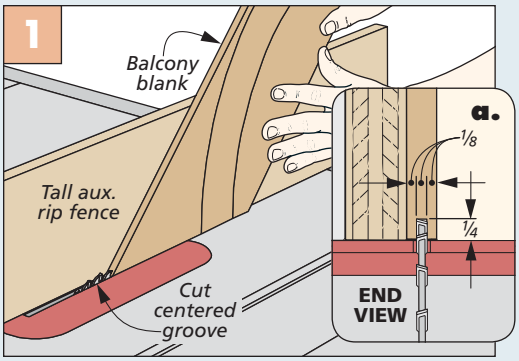

Spline Slots. A tall auxiliary rip fence supports the balcony blank while you cut a spline slot in each end.

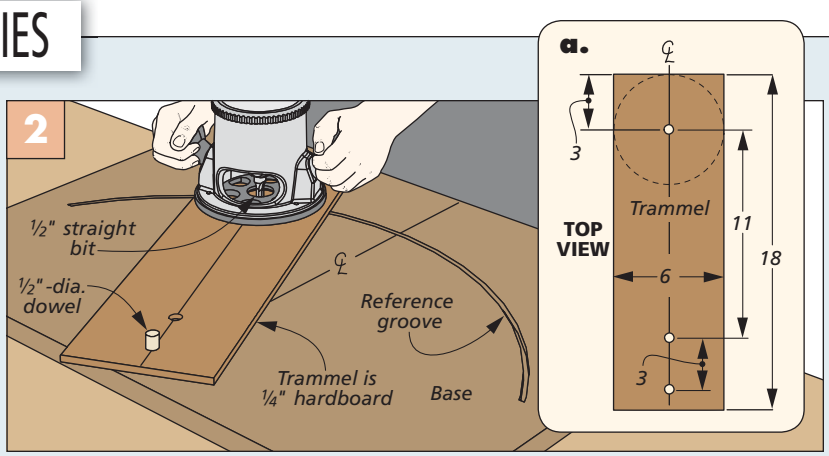

Router Trammel. The router is attached to a hardboard trammel (detail 'a'). After marking a centerline and drilling a pivot hole on a large MDF base panel, rout a shallow groove to help you locate the balcony sections.

a slot cut across the face to accept the splines, as you can see in Figure 1.

In order to cut the blanks to a uniform size, I turned to the router trammel setup shown in Figure 2. The trammel is a piece of hardboard with two pivot holes that correspond to the inner and outer radius of the balcony.

The trammel itself pivots around a dowel that fits into a hole in a base. To get the cleanest cut, it pays to rout through the blank in a couple passes, lowering the bit after each pass, as shown in Figure 3 below.

PERCH RAIL. The perch rail around the balconies is made from a length of aluminum tubing. You can gently bend the tubing pretty easily. I cut a round bending form from MDF to serve as a guide. The diameter of the form is 28½".

You just need a way to join the loose ends of each rail. The solution for that comes in the form of a short length of dowel and some epoxy. Slip the dowel inside each end of the tubing.

SUPPORT DOWELS. The final components to add are the dowels that support the balconies and rails. After cutting them to length, Figure 4 shows you how to drill the screw holes accurately.

To install the balconies and railings, I worked from the top down. Slide a balcony assembly and railing up around the martin house. Then glue in the dowels and drive the screws. At *Woodsmith.com*, you can find the plans for a mounting post for your yard. W

Materials, Supplies & Cutting Diagram

A	Platforms (4)	¼ ply. - 21 x 21	**Q**	Blocking (8)	¾ x 4 1/16 - 3⅞
B	Wide Sides (2)	¾ x 5⅛ - 23	**R**	Roof Panels (16)	⅜ x 6 1/16 - 20
C	Narrow Sides (2)	¾ x 3⅝ - 23	**S**	Roof Trim (16)	½ x ½ - 20 3/16
D	Plug (1)	2¼ x 3⅝ - 3⅝	**T**	Finial Base (1)	¾ x 3½ - 3½
E	Long Rails (16)	¾ x ½ - 7 11/16	**U**	Finial (1)	2¾ x 2¾ - 5⅞
F	Short Rails (8)	¾ x ½ - 7	**V**	Keeper (1)	¾ x 3 - 3
G	Long Panels (8)	¼ ply. - 5½ x 7 11/16	**W**	Balcony Blanks (12)	⅜ x 5 13/16 - 27½
H	Short Panels (4)	¼ ply. - 5½ x 7	•	(12) #8 x 1½" Fh Exterior Woodscrews	
I	Long Staves (8)	¾ x 4¼ - 23¼	•	(8) #8 x 1¼" Fh Exterior Woodscrews	
J	Upper Staves (4)	¾ x 4¼ - 10½	•	(1) #8 x 2½" Fh Exterior Woodscrew	
K	Lower Staves (4)	¾ x 4¼ - 8⅞	•	(24) Brass Turnbuttons	
L	Top Staves (4)	¾ x 4¼ - 4¼	•	(4) ½"-dia. x 36" Dowel	
M	Middle Staves (4)	¾ x 4¼ - 8½	•	(24) #4 x ½" Rh SS Woodscrews	
N	Bottom Staves (4)	¾ x 4¼ - 2½	•	(3) ⅜"-dia. x 92" Alum. Tubing	
O	Door Stops (12)	¾ x ¼ - 4 1/16	•	(24) #6 x ⅝" Fh SS Woodscrews	
P	Doors (12)	¾ x 4¼ - 5⅜	•	(48) #6 x ¾" Fh SS Woodscrews	

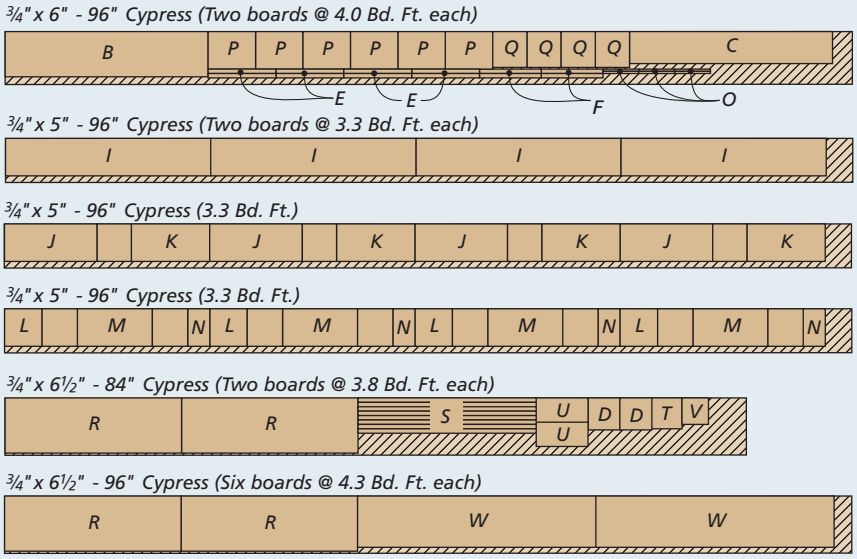

NOTE: *Parts 'R' and 'W' planed to ⅜" thick. Parts 'S' planed to ½" thick*

ALSO NEEDED: *One 48" x 96" sheet of ¼" exterior plywood*

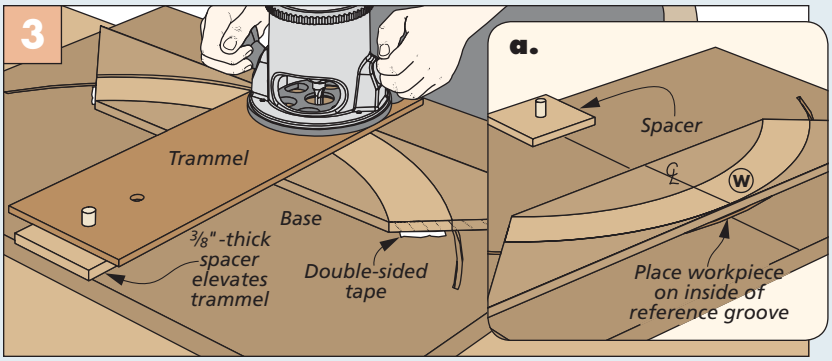

Shape the Balcony Pieces. Center the balcony blanks on the base panel and flush with the inner edge of the reference groove. Secure the blank with double-sided tape. Use the two holes in the trammel to shape the blank.

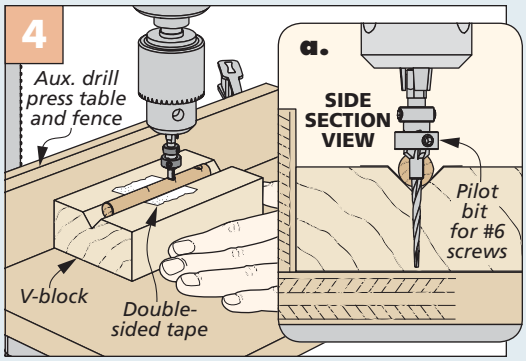

Drilling Dowels. A V-block supports the dowels for drilling. A bit of double-sided tape keeps them from shifting between holes.

Shop Project

multi-purpose Sharpening Station

Upgrade your standard bench grinder into an all-around sharpening workhorse. You'll never have an excuse for using a dull tool again.

If you use your bench grinder for most of the sharpening chores in your shop, you may have found the standard tool supports somewhat lacking in, well, support. But turning your grinder into a capable sharpening machine with precision adjustments is as easy as building our grinder station. It'll make previously difficult to accomplish sharpening jobs a breeze to complete.

TWO-WAY ADJUSTMENT. The key to this sharpening station's accuracy is the use of a miter track and T-bar combination set that allows for the adjustment capability in two directions. The aluminum-edged hardwood tool rest provides ample support and accepts a number of different hold-downs for various sharpening tasks. Building this platform for your grinder might just make it the most-used tool in your shop.

Construction Overview / OVERALL DIMENSIONS: 22"W x 11"H x 16½"D

A pair of leveling washers helps accommodate beveled blades

The tool rest is designed to accept several sizes of tool hold-downs

***NOTE:** Refer to Sources on page 67 for hardware and paint information*

Two positions provide ample adjustment range for the tool rest

Changing the height of the shelf supports allows you to customize the station to suit your particular bench grinder

The two-layer plywood shelf is stout enough to support most grinders

Simple hardwood skirting covers the plywood edges and protects the metal tracks from grinding debris

The two-piece miter track and T-bar combination set provides smooth side-to-side travel

A simple knob and threaded rod provides for quick front-to-back adjustments

A solid, three-piece base provides loads of stability

Woodsmith GO ONLINE EXTRAS Plans for building optional tool hold-downs are available at Woodmith.com

▲ The front-to-back adjustment knob is conveniently located in the bracket at the front of the jig.

▲ An optional wide tool hold-down is designed to accommodate jointer knives up to 6" long.

▲ Another hold-down option features a V-notch to grip the round handle of a dressing tool.

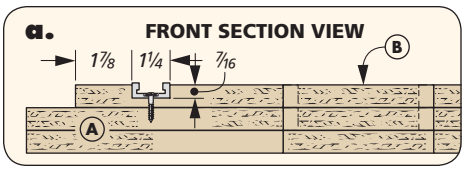

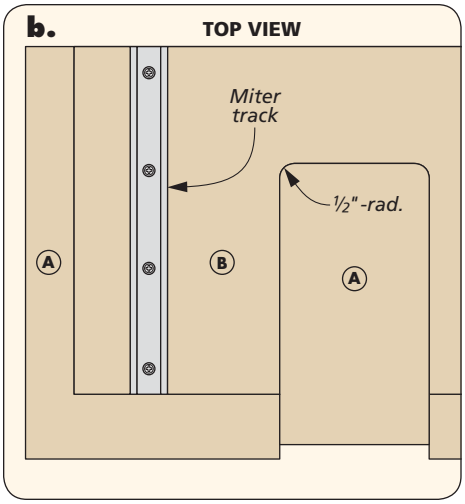

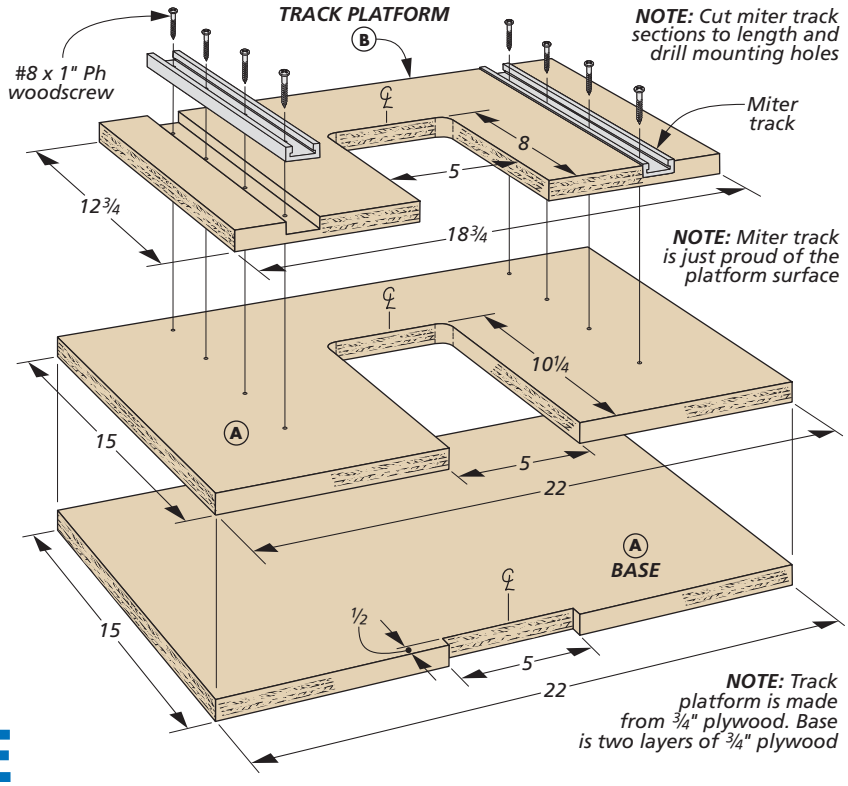

Start with the **BASE**

The sharpening station consists of several different parts — a heavy-duty base and shelf that support the grinder, and a sliding deck unit that holds the hardwood tool rest and allows for two directions of travel.

BOTTOM-UP BUILD. The three parts of the base unit are shown above. You'll start by cutting them to size. The lower layer of the base has a shallow notch on the front edge that'll house an adjustment bracket later on. This notch is easy to make at the table saw (Figure 1).

The upper base layer has a deeper U-shaped opening on its front edge. This opening makes room for an adjustment block that connects to the deck. Creating this opening is a two-step process. First, drill two holes to define the inside corners of the opening before moving to the band saw to remove the rest of the waste, as shown in Figure 2 below.

After cutting out the U-shaped opening, spend a little time sanding the edges of the opening smooth. This surface will be used as a pattern to guide a flush-trim router bit shortly. Now glue these two parts together.

TRACK PLATFORM. Next up, you'll cut the track platform to size. This piece has a U-shaped opening, as well, that matches the one in the base. But here, you can simply rough cut this opening at the

How-To: SHAPE & ASSEMBLE THE BASE & DECK

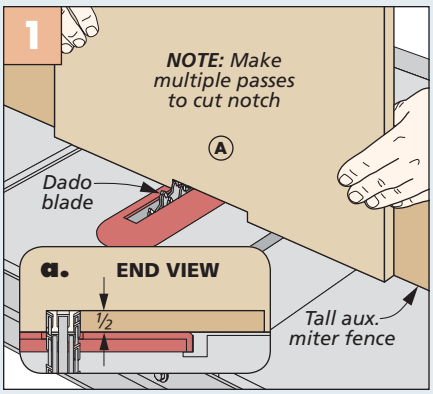

Notch Base. A dado blade and tall auxiliary miter fence make quick work of the notch in the lower base layer.

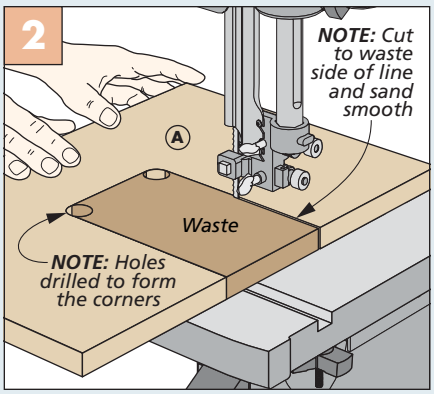

U-Shaped Opening. With the corners of the opening established, remove the rest of the waste at the band saw.

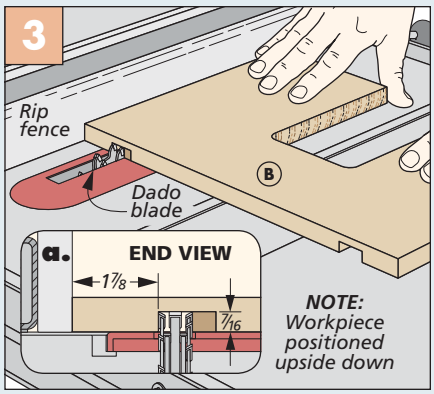

Grooves for Miter Track. Use a dado blade to make the wide grooves in the top of the track platform.

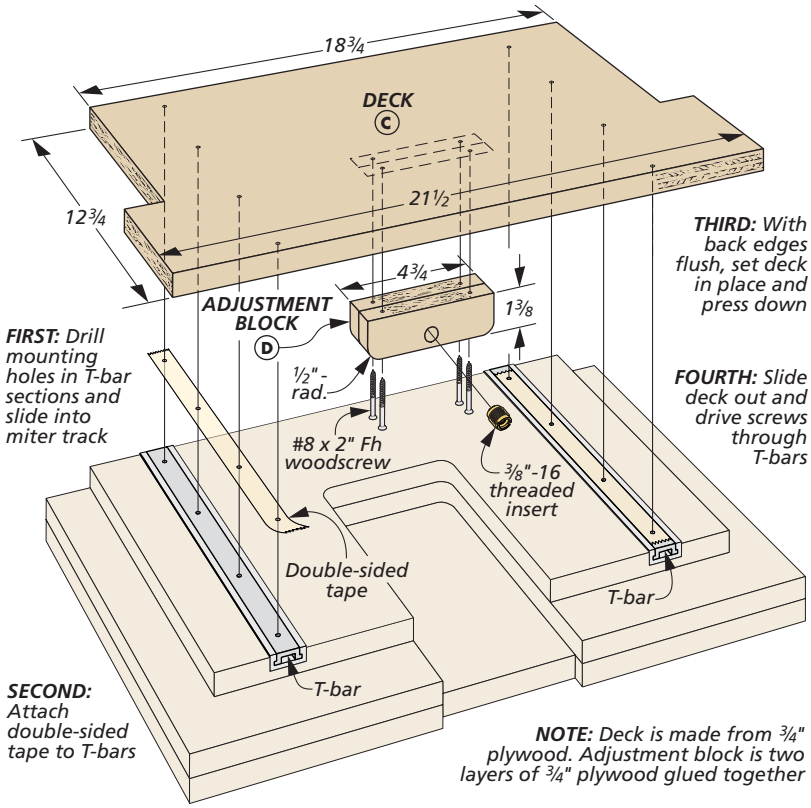

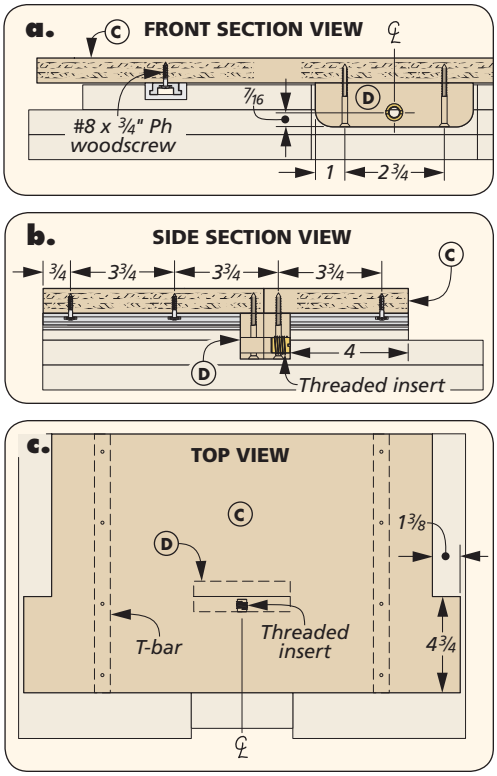

band saw. The reason you can leave the opening in the track platform rough is because you'll trim it flush to match the opening in the base. But first, head over to the table saw to cut the grooves for the miter track (Figure 3, previous page). Then, glue the platform to the base before trimming it as shown in Figure 4.

As I mentioned earlier, this sharpening station makes use of a unique miter track and T-bar combination set for smooth travel. You can now cut the miter track sections to length, drill counterbored mounting holes, and screw them in place in the grooves.

SLIDING DECK

The T-bars are mounted to the underside of the deck, shown above. Start by cutting the deck to size and then make the notches along the edges. The table saw makes quick work of the long cuts, and the band saw can be used to cut the waste free (Figure 5). To attach the T-bars to the deck, I used two strips of double-sided tape on the back of the T-bars. The sequence is described in the main drawing above.

ADJUSTMENT BLOCK. The last piece is the adjustment block. In conjunction with the adjustment bracket, it allows the deck to move front to back. Cut it to shape and drill the mounting holes and a hole for a threaded insert (Figure 6), before screwing it in place to the underside of the deck (details 'b' and 'c,' above).

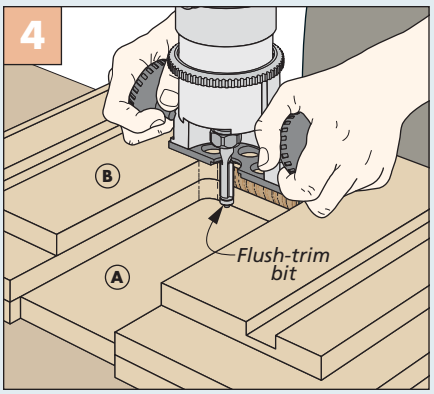

Clean Up Opening. Use the edge of the base to guide a flush-trim bit around the track platform opening.

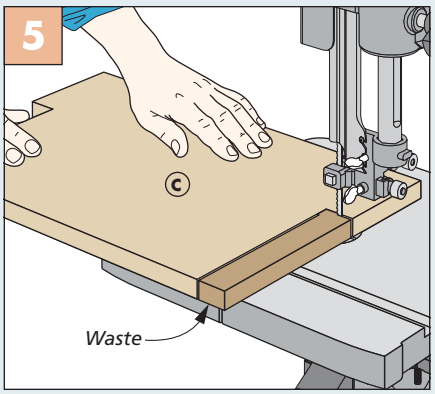

Notches in Deck. After making the long cuts at the table saw, finish the notches at the band saw.

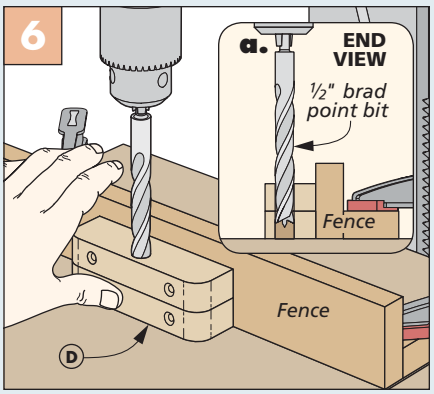

Mounting & Insert Holes. Drill the mounting holes and the hole for the threaded insert at the drill press.

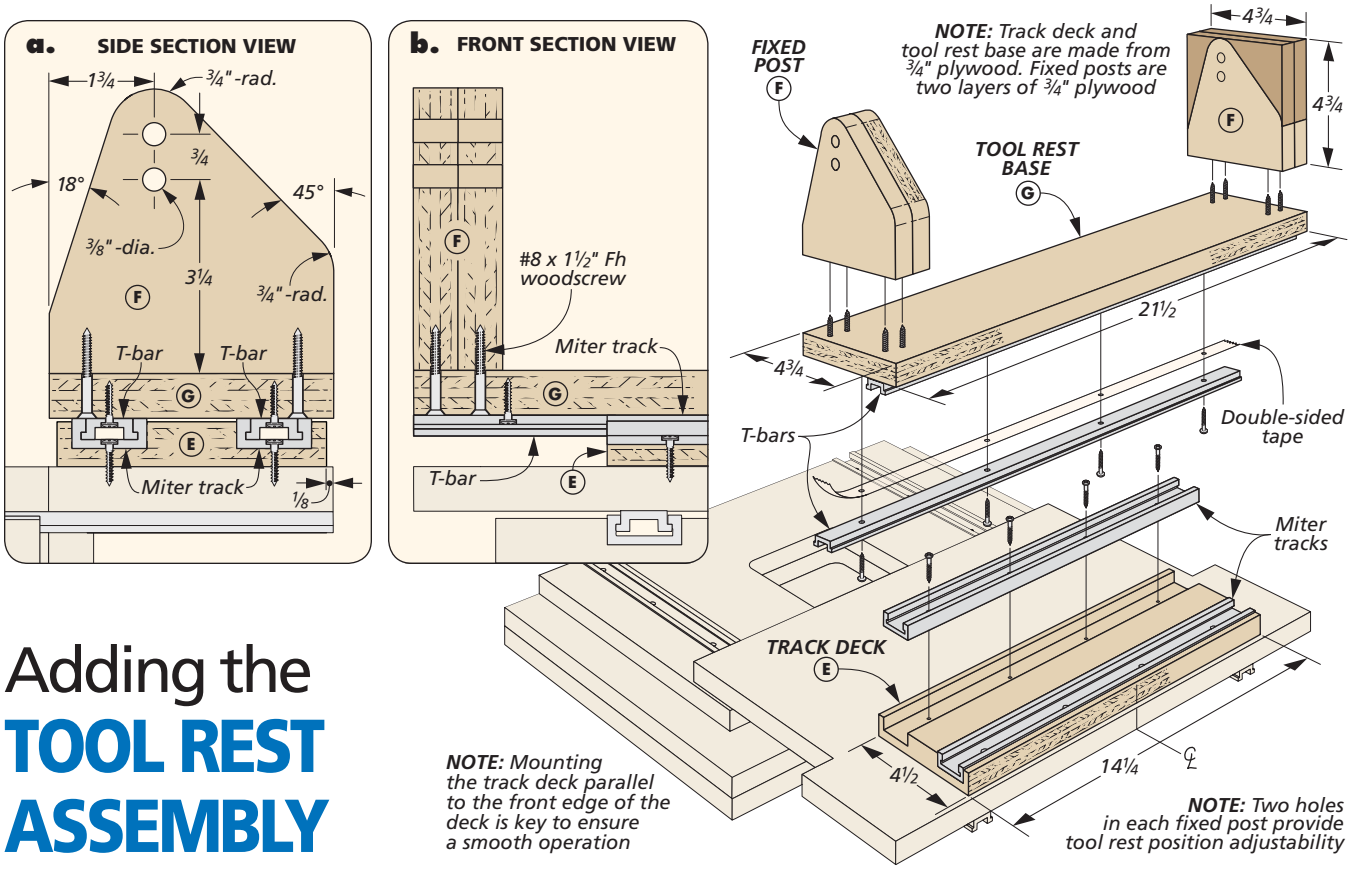

Adding the TOOL REST ASSEMBLY

With the base of the grinding station complete, you are ready to turn your attention to building the tool rest assembly. While the deck provides the front-to-back movement, the section you'll make next allows for the side-to-side travel and uses another set of the miter track and T-bar components.

TRACK FOUNDATION. You'll start by cutting the track deck to size and then switching to a wide dado blade to cut the two grooves for the miter track base sections (Figure 1). Glue the track deck in place on the deck (detail 'a') and then use the same procedure as before to mount the miter track sections.

POSTS & TOOL REST BASE. The fixed posts are made from two layers of glued-up plywood. Figures 2 and 3 show the process for drilling the holes and then cutting them to shape. Next, you'll cut the tool rest base to size and drill the mounting holes on each end. The fixed posts are attached here with screws.

How-To: CUT DADOES & SHAPE THE POSTS

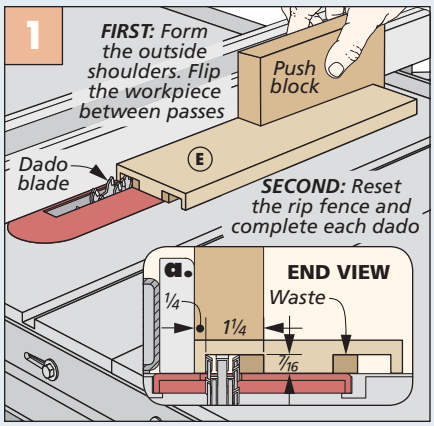

Wide Dadoes. Use a dado blade to cut the dadoes in the track deck. You'll need to make several passes.

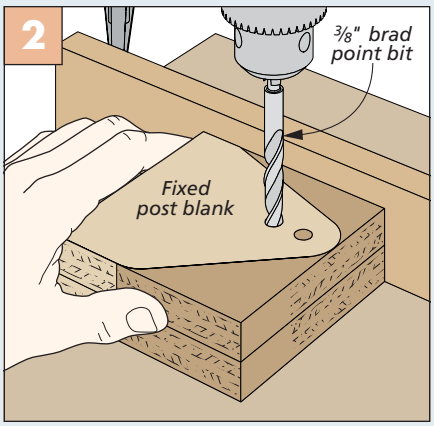

Mounting Holes. Lay out the position of the mounting holes in the fixed post blanks and then drill them.

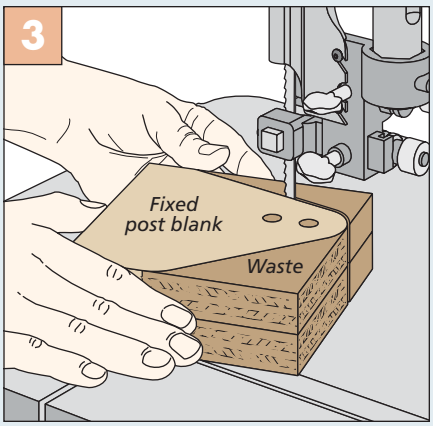

Shape Posts. Stay to the waste side of the layout lines when cutting the posts. They can then be sanded smooth.

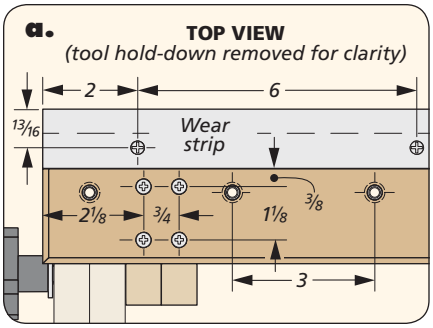

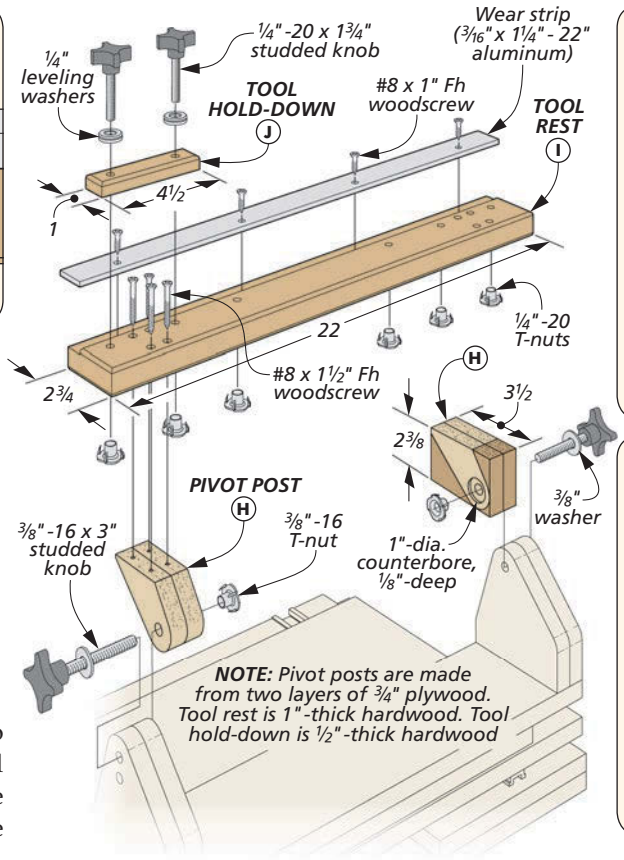

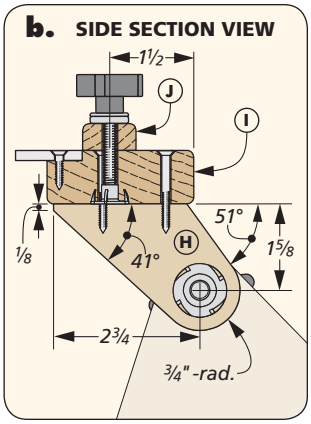

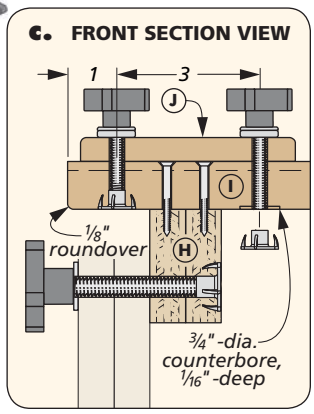

Now, the T-bar sections are installed on the underside of the tool rest base following the same steps used to mount the T-bars to the deck earlier. To allow for an extended range of travel, the T-bar sections here are longer than the miter track bases.

ADJUSTABLE TOOL REST

Finally, you can add the tool rest to the assembly. It's made from a piece of hardwood and has two posts attached to the underside that connect to the fixed posts and allow the rest to pivot. These pivot posts are made in much the same way as the fixed posts (Figure 1, below). On these posts, however, you'll also be drilling counterbores for T-nuts. These T-nuts accept a set of threaded knobs.

HARDWOOD TOOL REST. The tool rest has a rabbet along the top edge to provide a home for an aluminum wear strip. This rabbet is cut at the table saw (Figure 2). Now, a number of holes need to be drilled in the rest and the wear strip. These include mounting holes in the table and wear strip, as well as counterbores in the rest for the T-nuts, as shown in Figure 3.

TOOL HOLD-DOWNS. The tool hold-down shown above is sized to accommodate most widths of hand plane irons and other flat blades. The photos at the bottom of page 37 show a couple of other hold-downs that you may find useful. One holds jointer knives up to 6"-long, while the other is designed to secure a dressing tool for truing the grinder wheels. Information for making these other hold-downs can be found at *Woodsmith.com*.

How-To: MAKE THE PIVOT POSTS & TABLE

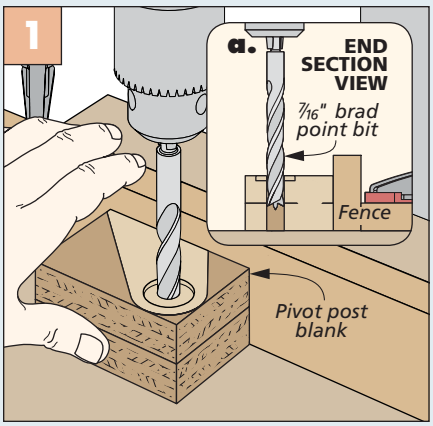

Counterbored Holes. After drilling the counterbores in the pivot post blanks, drill the through holes.

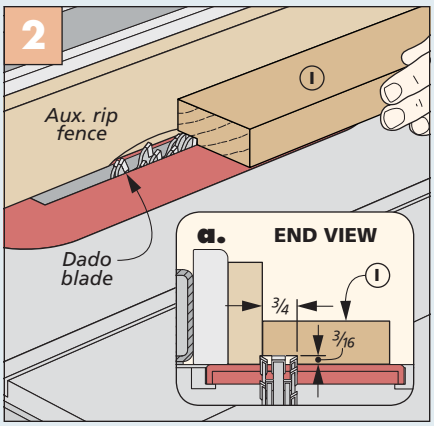

Wear Strip Rabbet. Bury a wide dado blade in an auxiliary rip fence to create the rabbet for the wear strip.

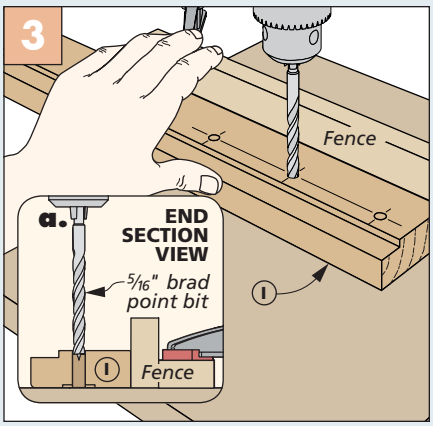

Hold-Down Holes. Lay out and drill all of the mounting and counterbored hold-down holes in the tool rest.

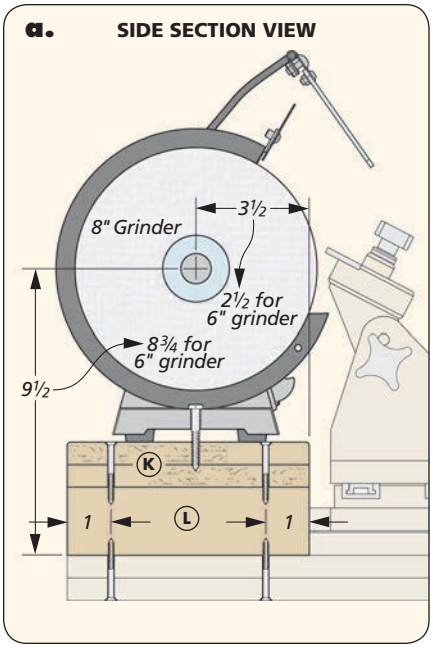

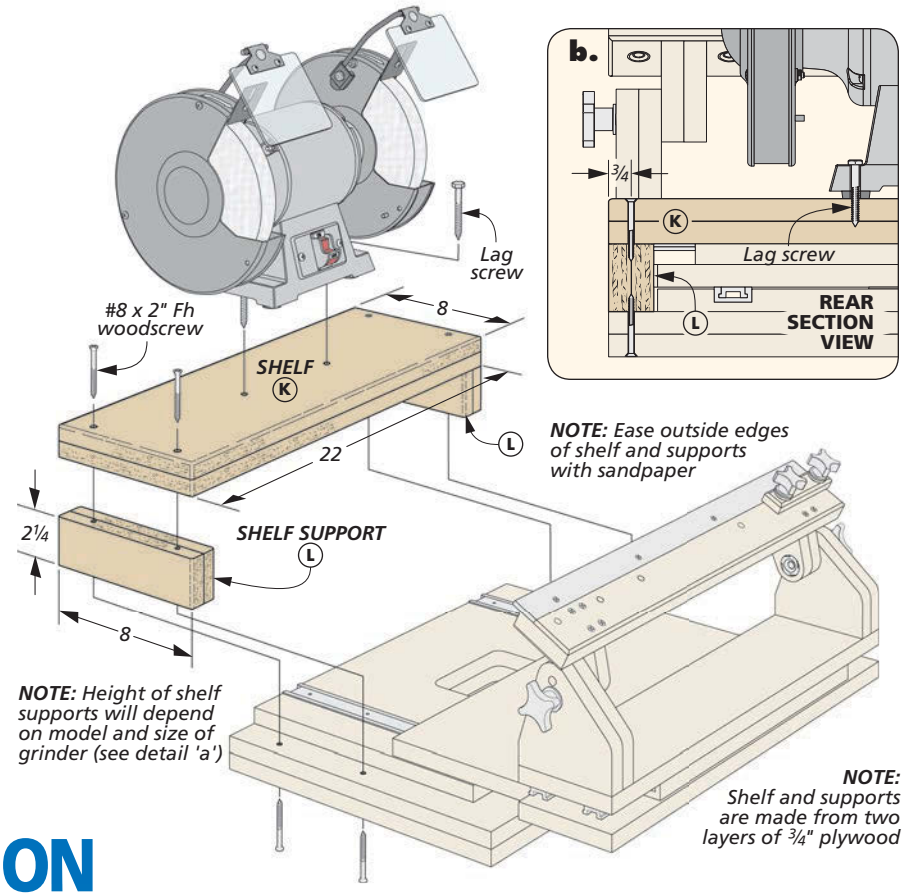

Completing the GRINDER STATION

With the bones of the grinder sharpening station complete, it's time to add the heart of this project — the grinder. It sits on a solid, two-layer plywood shelf, which in turn is held up by equally beefy shelf supports.

Because not all bench grinders have the same dimensions, this is where you can customize the shelf supports to accommodate the grinder you'd like to use. I mounted a *Rikon* grinder with 8"-wheels to my sharpening station. If you'd like to use the same grinder, you'll find information about it, as well as the rest of the hardware and paint used for this project, in Sources on page 67.

If you opt to use a different model or size grinder (perhaps a 6" version), check detail 'a' to determine how high to mount your grinder. The drawing above provides the shelf support height dimension, as well as the grinder location for the model I used.

SHELF & SUPPORTS. To make the shelf and supports, you'll start by gluing up two layers of plywood. The shelf is simply cut to size. With the proper dimensions in mind to accommodate your grinder, cut the shelf supports to size, as well. Before attaching these pieces to the base,

Materials, Supplies & Cutting Diagram

A	Base (1)	1½ ply. - 15 x 22
B	Track Platform (1)	¾ ply. - 12¾ x 18¾
C	Deck (1)	¾ ply. - 12¾ x 21½
D	Adjst. Block (1)	1½ ply. - 1⅜ x 4¾
E	Track Deck (1)	¾ ply. - 4½ x 14¼
F	Fixed Posts (2)	1½ ply. - 4¾ x 4¾
G	Tool Rest Base (1)	¾ ply. - 4¾ x 21½
H	Pivot Posts (2)	1½ ply. - 3½ x 2⅜
I	Tool Rest (1)	1 x 2¾ - 22
J	Tool Hold-Down (1)	½ x 1 - 4½
K	Shelf (1)	1½ ply. - 8 x 22
L	Shelf Supports (2)	1½ ply. x 2¼ - 8
M	Adjst. Bracket (1)	1½ ply. - 2⅛ x 5
N	Skirting	¼ x 1¼ - 70 rgh.

- (2) 48"-long F-B Miter Track & T-Bars
- (16) #8 x 1" Ph Woodscrews
- (16) #8 x ¾" Ph Woodscrews
- (12) #8 x 2" Fh Woodscrews
- (1) ⅜"-16 Threaded Insert
- (28) #8 x 1½" Fh Woodscrews
- (4) #8 x 1" Fh Woodscrews
- (16) #8 x 1¼" Fh Woodscrews
- (1) 3/16" x 1¼" x 22" Aluminum
- (6) ¼"-20 T-Nuts
- (2) ⅜"-16 T-Nuts
- (2) ⅜"-16 x 3" Studded Knobs
- (4) ⅜" Washers
- (2) ¼"-20 x 1¾" Studded Knobs
- (2) ¼" Leveling Washers
- (1) ⅜"-16 Threaded Knob
- (1) ⅜"-16 x 10" Threaded Rod
- (2) ⅜" Hex Nuts
- (2) Lag Screws (to mount grinder)

1"x 3" - 24" Hard Maple (0.6 Bd. Ft.)

½"x 1" - 12" Hard Maple (0.1 Sq. Ft.)

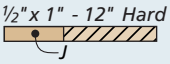

¼"x 1½" - 72" Hard Maple (0.8 Sq. Ft.)

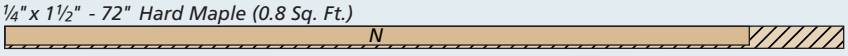

***ALSO NEEDED:** One 60" x 60" sheet of ¾" Baltic birch plywood*

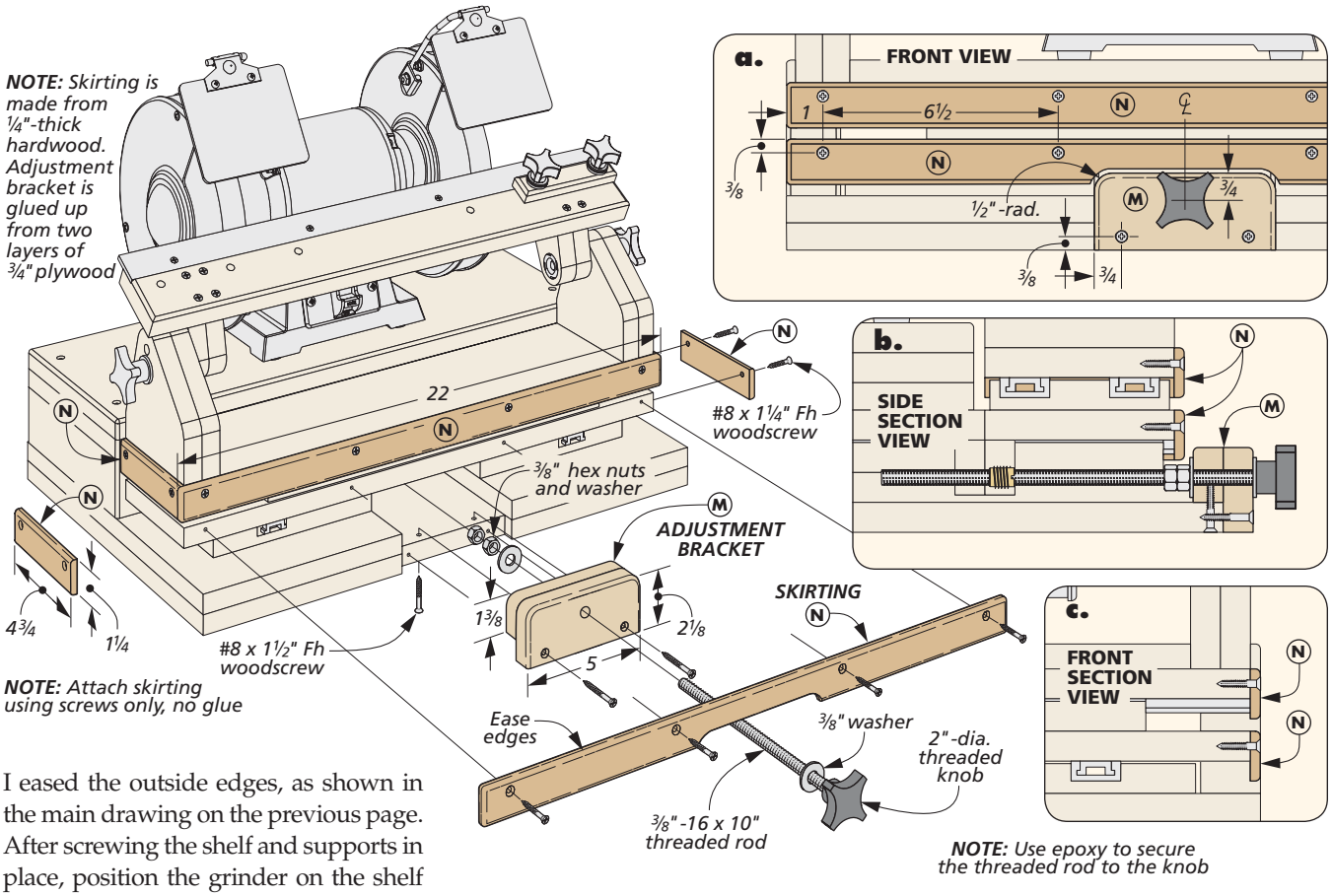

I eased the outside edges, as shown in the main drawing on the previous page. After screwing the shelf and supports in place, position the grinder on the shelf (detail 'a,' previous page) and use a couple of lag screws to secure it to the shelf.

ADJUSTMENT BRACKET

All that's left is to make the adjustment bracket that's fastened to the front of the base and add the hardwood skirting to the plywood edges, as shown above. I began by making the bracket.

Figures 1 and 2 below, walk you through making this piece. It's simply two layers of plywood with a hole in the center for the threaded adjustment rod. A rabbet on the back allows it to wrap around the front edge of the base. After easing the corners and the edges, the brackets are screwed in place (detail 'b') and the long threaded rod, washers, and hex nuts are added.

Finally, the skirting pieces are cut to size and screwed in place. They conceal the plywood edges, as well as provide some protection to the miter tracks. See the online extra at *Woodsmith.com* for information on using the sharpening station. W

How-To: MAKE THE ADJUSTMENT BRACKET & SKIRTING

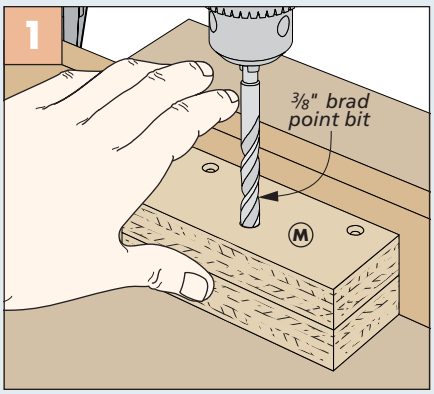

Drill Holes. Complete the mounting holes, as well as the larger through hole for the threaded rod, at the drill press.

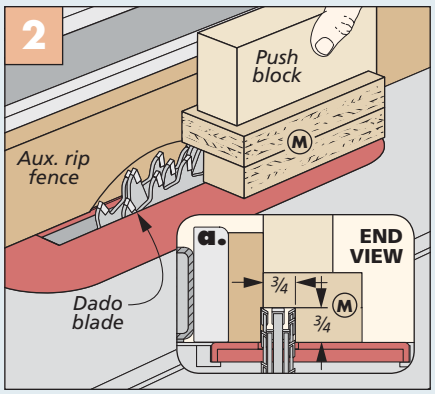

Rabbet Bracket. A dado blade buried in an auxiliary rip fence is all it takes to form the rabbet in the bracket.

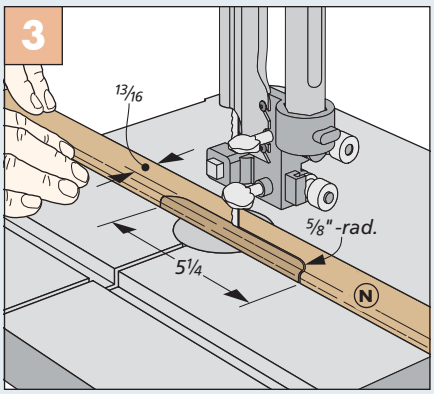

Skirting Notch. The lower front section of skirting requires a notch to fit around the adjustment bracket.

Heirloom Project

traditional Empire Bench

Bring an elegant piece of European history into your own home with this classic, comfortable bench that's fit for a king.

Known for its tall, graceful arms with sweeping curves, the empire bench gained its name due to its popularity among European rulers in the 17th, 18th, and 19th centuries. This version of the classic bench features many of the same notes as the traditional ones — elegant lines, gentle curves, and time-tested construction — but with a more down-to-earth design that'll look great in your home, even if it's not a palace.

DETAILS OF THE DESIGN. As the photo above shows, the bench has a stout, sturdy appearance due to the use of thick, quartersawn white oak throughout. And rock-solid mortise and tenon joinery ensures that the bench will stay together for the long haul.

Of course, the first element that likely draws your eye are the end assemblies. With curved legs and slats and rounded crest rails at the top, they certainly lend a distinctive look to the bench. And as you may have guessed, the end assemblies also pose some very unique woodworking challenges.

STEP-BY-STEP CONSTRUCTION. By breaking down the assembly into simpler steps, however, you should find that the challenges of this project become quite rewarding. A little template work makes the curved legs a snap, and there's a simple band saw technique for the slats. The rounded crest rail at the top begins with some table saw work, and then hand planes and scrapers can handle the rest. So read on to see how you can add a little royal elegance to your own home.

Construction Overview / OVERALL DIMENSIONS: 57⅛"W x 32¼"H x 22"D

Woodsmith GO ONLINE EXTRAS

For full-size templates for the bench, go to Woodsmith.com

Crest rail assembly formed from four separate pieces

Mortise strips have notches that accept slats

Diamond cutout is made with a coping saw

Cushion built with high-density foam for comfort and faux leather for a stylish look

Cleats support cushion

Corner blocks reinforce joinery

Rails and stretchers joined to legs with mortise and tenon joinery

Legs cut to consistent shape using a hardboard template

Rounded crest rail shaped with table saw and hand tools

Curved slats cut to shape at the band saw

Curved legs and slats on the end assemblies are the highlights of the bench. Each end is crowned with a large, rounded crest rail for comfort.

The shop-built cushion consists of a plywood bottom panel, high-density foam, batting, and a faux-leather top.

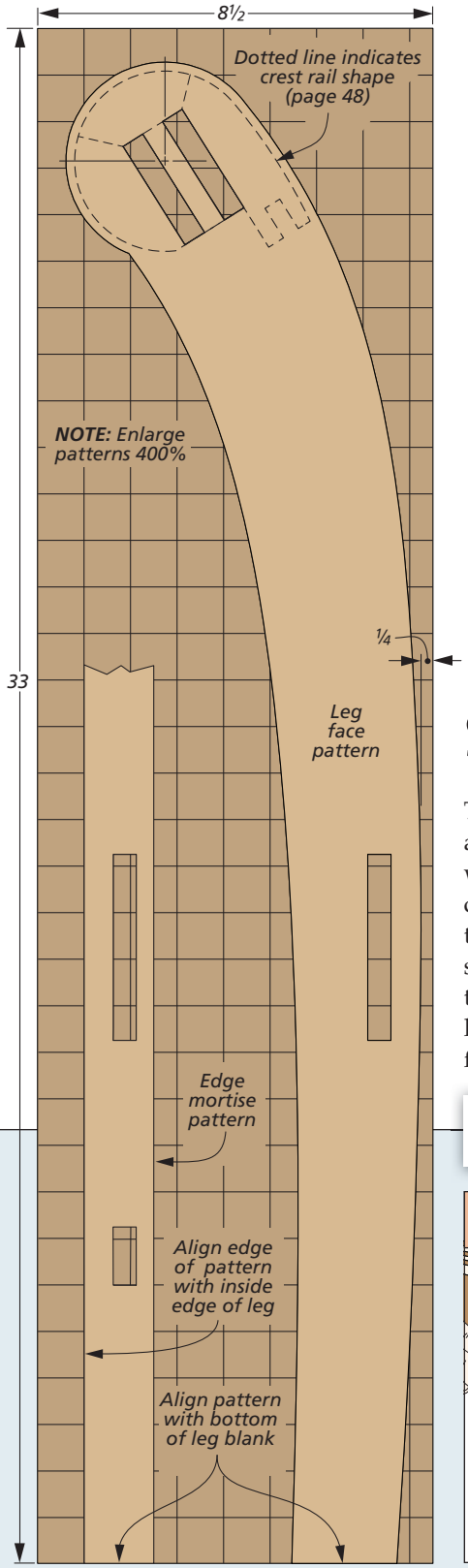

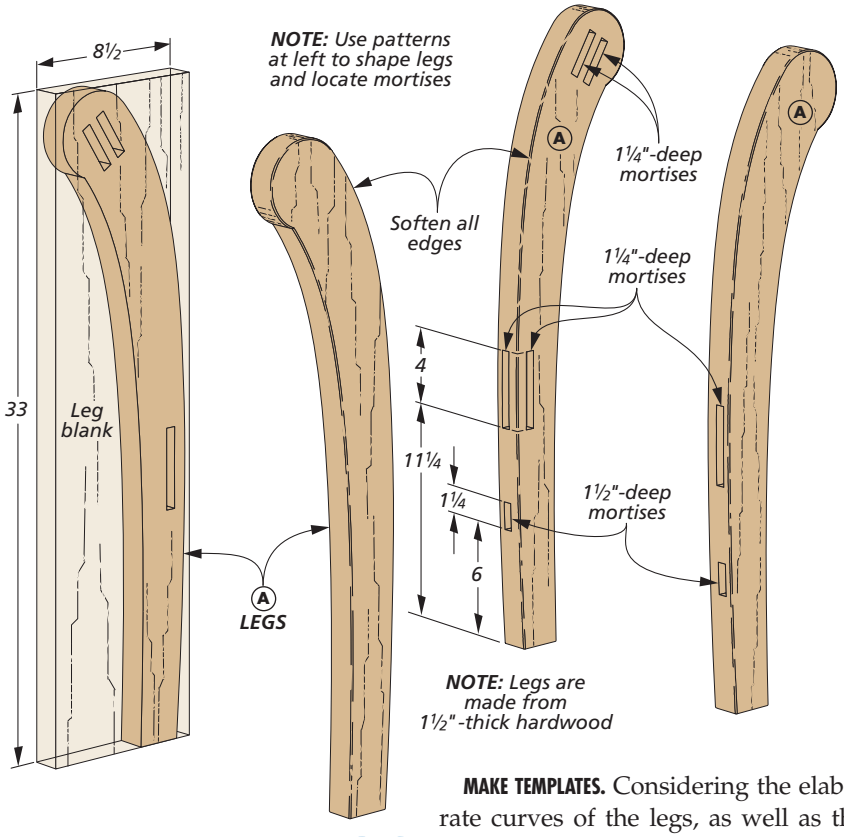

Shape the LEGS

The four curved legs of the empire bench are a good place to get started on the woodworking for this project. As you can see, they're made from thick, quartersawn white oak. Though the size and shape of each of the four legs is identical, they end up as two sets of mirror-image legs once the mortises are added to the faces and edges of the legs.

MAKE TEMPLATES. Considering the elaborate curves of the legs, as well as the angled mortises at the top of each, getting consistency from leg to leg without a little help would be a challenge. To solve that problem, I started the work on the legs by making templates from ¼" hardboard (Figures 1 and 2 below). As shown in the drawings at left, there are two templates: One to lay out the edge mortises and a second, more elaborate template that features both the shape of the leg and the mortise locations. By drilling these mortises all the

How-To: MAKE THE TEMPLATE

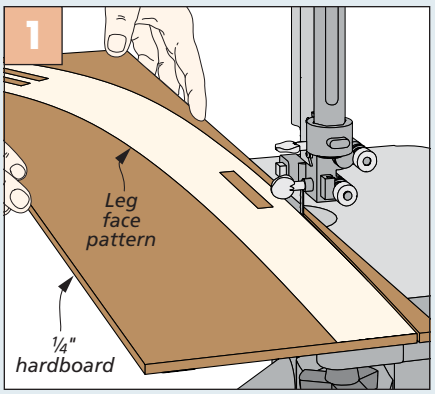

Cut to Shape. Cut the leg shape on a piece of ¼" hardboard. Stay outside the layout lines, then sand smooth.

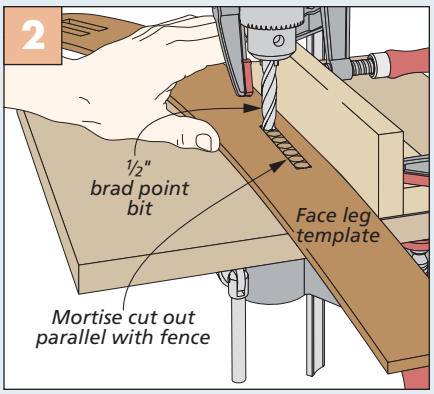

Template Mortises. Drill all the way through the mortise locations on the template and square them with a chisel.

Patterns. The left pattern shows the edge mortises, while the right provides the leg shape and face mortises.

way through the templates, you can use the same templates on each leg by simply flipping them over depending on which leg you're working on.

START ON THE LEGS. Once the templates are complete, it's time to start on the legs themselves. Plane stock down to thickness and cut four blanks to match the dimensions shown in the main drawing on the previous page. Then label each leg so that you can keep all of the joinery straight as you get started (right-front, right-rear, left-front, left-rear).

EDGE MORTISES. While the blanks are still square, lay out the shape of the legs and the mortise locations on all of them using the hardboard templates, as shown in Figures 1 and 2. Now head to the drill press to form the edge mortises on the legs first. Figure 3 shows the setup. Note that the two mortises are different depths (details 'a' and 'b').

ADD THE CURVES. With those mortises complete, you can cut out the legs, staying just outside the layout lines. Figure 4 provides the details.

TRIM THE LEGS. After cutting all four legs at the band saw, the leg face template once again provides the key to getting each leg perfectly consistent in size and shape. Apply double-sided tape to the template, carefully align it on the leg, and press it down. Then you can trim each one to final size at the router table as indicated in Figure 5 at right.

FACE MORTISES. At this stage, all four of your legs have edge mortises and also are trimmed to their final shapes. All that's left now is drilling the face mortises in the legs. You'll note that there are three mortises in all: Two near the top of the legs to accommodate twin tenons on the crest rail, and a single mortise near the bottom that accepts the side rail.

Since the mortise locations are clearly laid out from the template work you did earlier, the process of drilling them should be pretty straightforward. The legs are curved at this point, so you'll need to take care in aligning the bit with your layout lines as you drill. I added an alignment block to my drill press fence to help with this, as shown in Figure 6. Then a little chisel work finishes the job.

How-To: SHAPE THE LEGS & CUT MORTISES

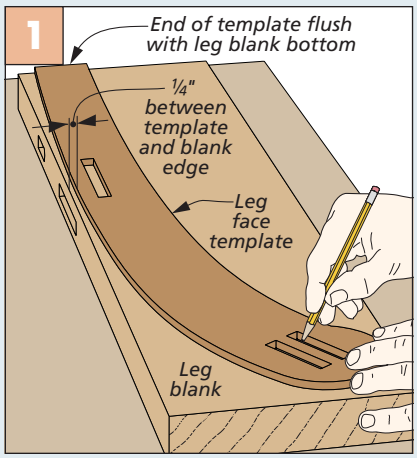

Lay Out Profile. Align the template on the leg blank and trace the profile. Flip it for the mirror image legs.

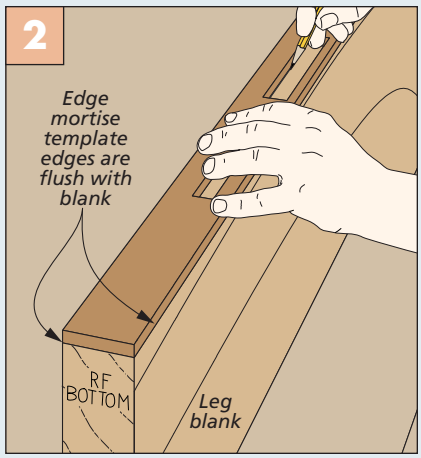

Lay Out Edge Mortises. Align the edge mortise template at the bottom of the leg blank to mark the mortises.

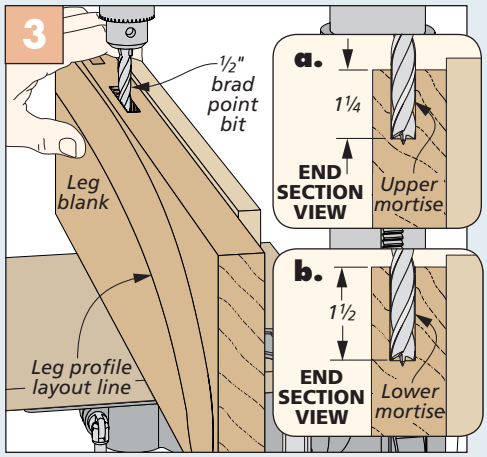

Edge Mortises. Use a tall auxiliary fence at the drill press to support the leg blank while drilling out the edge mortises.

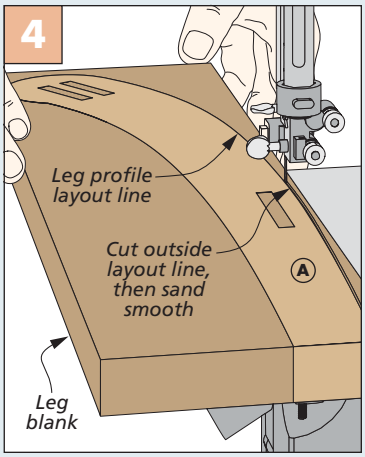

Shape the Legs. Cut out the legs at the band saw, staying outside the layout lines.

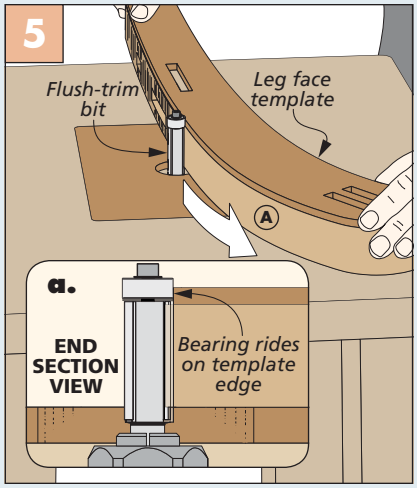

Flush Trim Legs. Apply the template to the leg with double-sided tape and flush-trim the edges at the router table.

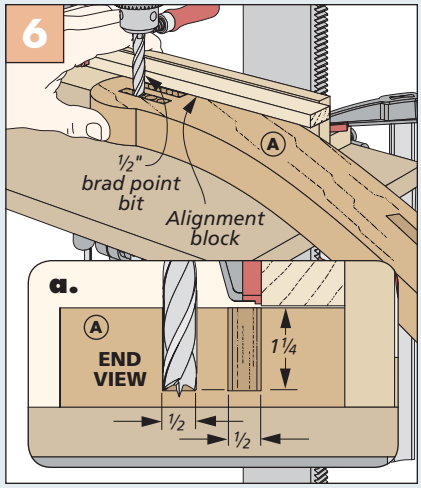

Face Mortises. Finish the legs by boring out the face mortises at the drill press. Square them with a chisel.

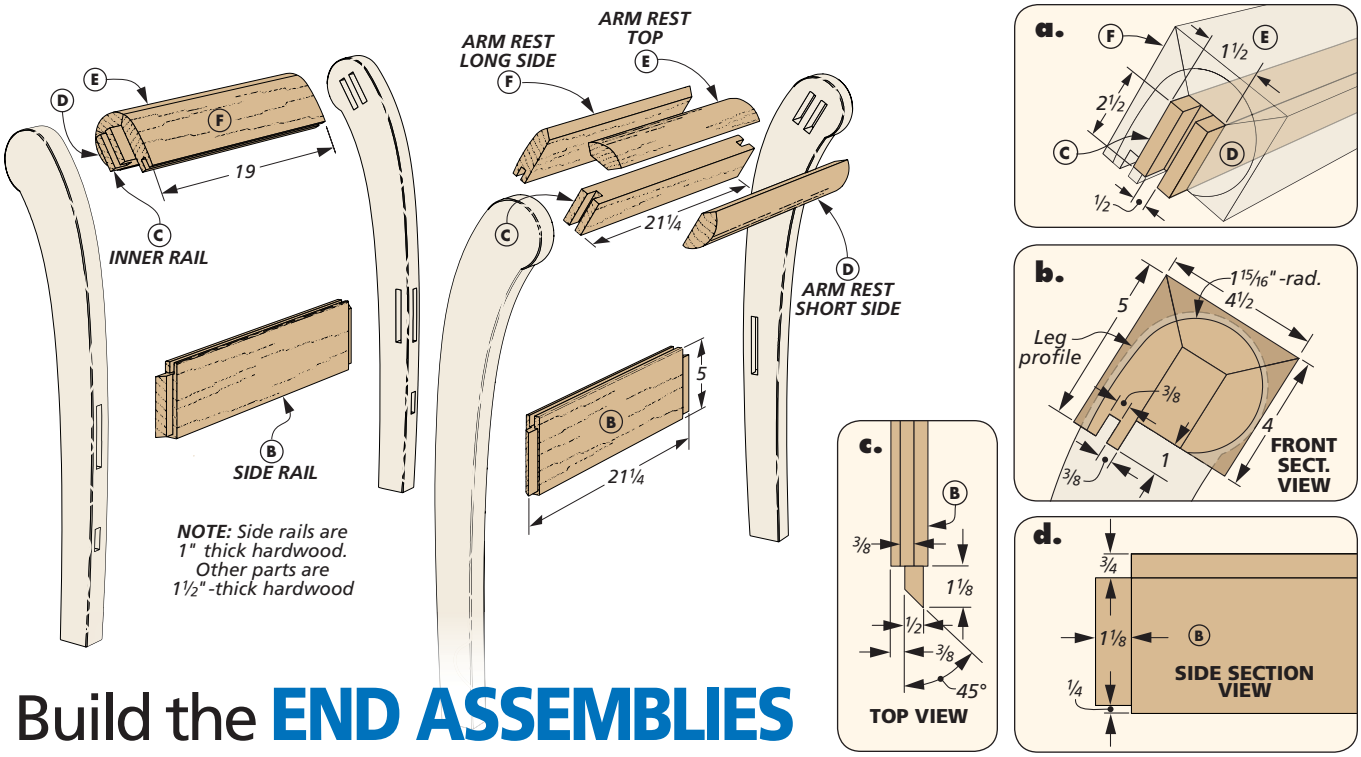

Build the END ASSEMBLIES

The parts that join the front and back legs to form each end assembly of the bench are not your average cup of tea. A large, rounded crest rail that's glued up from several parts connects the legs at the top, while a more basic side rail forms the connection at the bottom. Later on, curved slats fit between these rails. It all takes a process of careful measuring, cutting, and fitting, but the following sequence will help get you there.

SIDE RAILS. I started the end assembly construction with the simplest parts first, which are the two side rails. After cutting them to size, cut a groove in the top edge (Figure 1). This groove is not centered, so I used a dado blade set to the full width of the groove to cut it and adjusted the rip fence to accurately position the groove.

Later on, this groove accepts a mortise strip that has notches to hold the ends of the curved slats. You'll find more on these mortise strips on page 50.

Now cut the tenons on the ends of the rails using a wide dado blade in the table saw (Figures 2 and 3). The tenons are offset on both the width and thickness of the parts, so you'll need four separate depth settings for each facet of the tenon. Then you can tilt your saw blade and miter the ends of the tenons, as indicated in detail 'c.' The front and back rails are also mitered later, so this cut allows them to fit cleanly in the adjoining mortises.

CREST RAIL ASSEMBLIES. The top of each end assembly is crowned by the rounded crest rail. This assembly is made from five parts. An inner rail has the twin

How-To: SHAPE THE SIDE RAILS

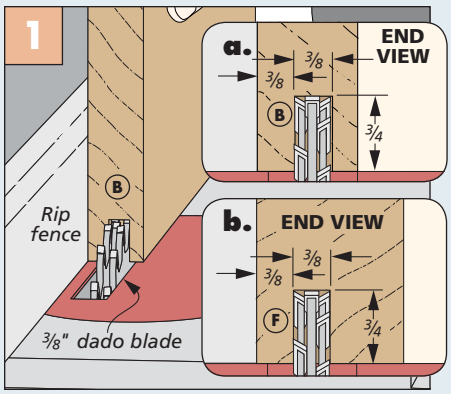

Side Rail Groove. Cut the off-center grooves in the side rail and arm rest long side using a dado blade.

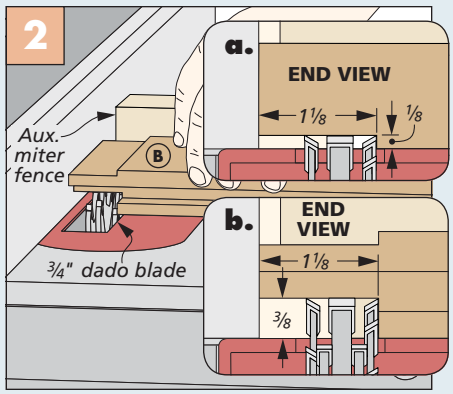

Tenon Cheeks. The side rail tenons are also off-center. Note the two different blade height settings in the details.

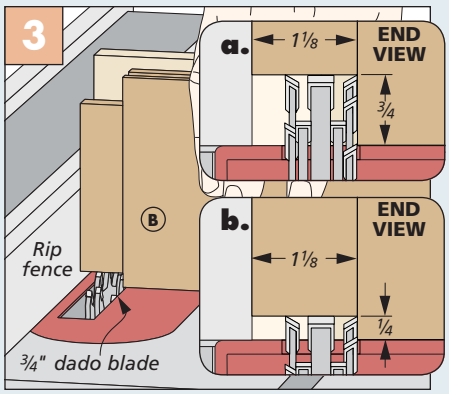

Tenon Shoulders. Now stand the rail on edge to cut the shoulders. Here again, it takes two blade height settings (details).

tenons that fit the mortises in the legs. Then, three mitered arm rest pieces wrap the inner rail and are ultimately shaped round to match the legs. Just as on the side rails that you made earlier, the bottom edge of one of the arm rest pieces has a groove to accept the mortise strips.

I started on the inner rails first. After cutting them to size, use a backer to stand the pieces on end and cut a single groove to form the twin tenons. Figure 1 below shows how it's done.

Now find pieces with a good grain match that you can use to form all three parts of the arm rest of each crest rail assembly. This ensures a consistent grain appearance from one piece to the next as the crest rail is shaped.

After cutting these parts to size, cut a groove in the wide arm rest piece to match the one in the side rail (Figure 1, previous page). Now tilt the table saw blade 45° and bevel the three parts for each arm rest (Figures 2 and 3 below). Check the fit around the inner rail to make sure the parts fit together seamlessly. Then you're ready to glue up the crest rail as shown in Figure 4 below.

SHAPING THE CREST RAIL. At this point, the crest rail assembly is square. The remainder of the work on it involves using a table saw and hand tools to form the round shape of the rail.

As you get started, it's good to have a guide to work toward. The photo on the right shows a little template of the shape that I made. You'll find the details for this template on the pattern on the left side of page 46.

Next up was a trip to the table saw, where I tilted the blade to line up with the marked layout on the end of my rail and made a beveled cut to remove the waste. I repeated this process around the perimeter of the rail, as explained in Figure 5 below. Adjust the rip fence and blade angle to remove as much of the waste as possible around the rail.

▲ This round end scraper is the ideal tool for the finishing touches on the crest rail. Check Sources on page 67.

Finally, it's time to work with a block plane, scrapers, and sandpaper to shape the rail. Keep working toward your layout line, checking the ends with the template until you achieve a round, smooth finished rail.

How-To: FORM THE CREST RAIL

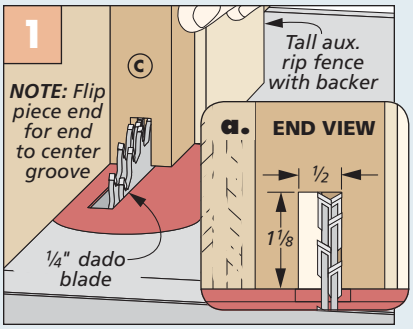

Grooves. The twin tenons on the inside rails are formed with centered grooves. Stand the piece on end.

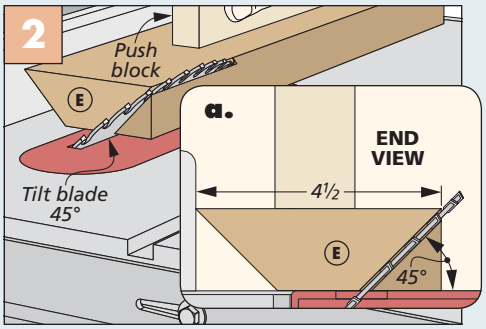

Bevel Arm Rest Top. Tilt the blade in order to make a bevel rip cut along both edges of the arm rest top.

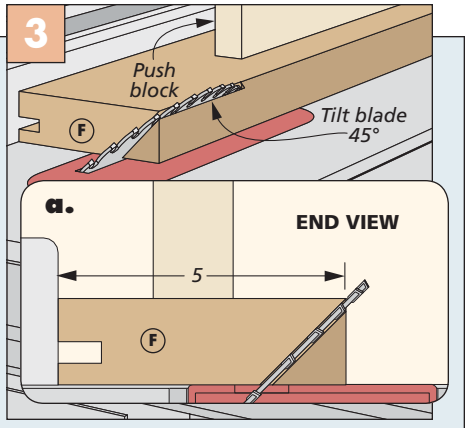

Bevel Arm Rest Sides. With the same blade setting, you can adjust the rip fence to cut the other arm rest parts.

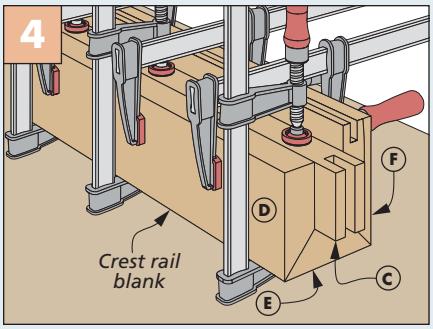

Crest Rail Glueup. Vertical clamps keep the miters from slipping as you tighten the horizontal ones.

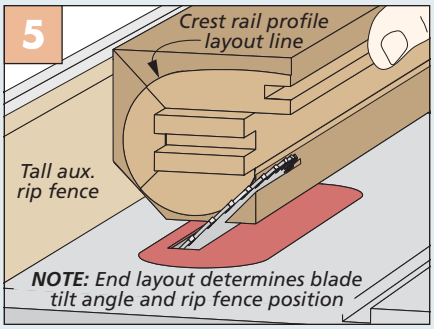

Bevels. Bevel cuts begin the work of rounding the crest rail. Set the blade tilt and rip fence based on the layout.

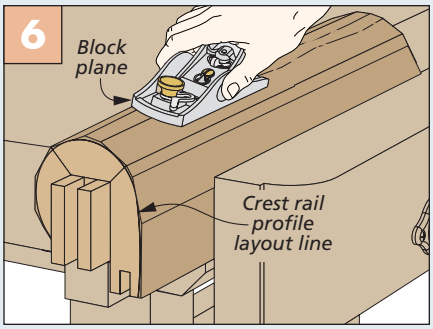

Hand Work. After cutting the bevels, work toward the layout line using a block plane, scraper, and sandpaper.

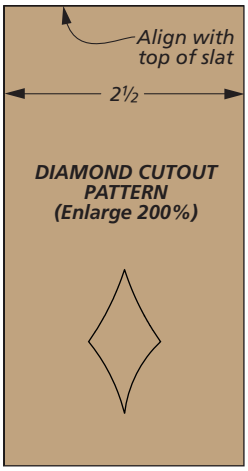

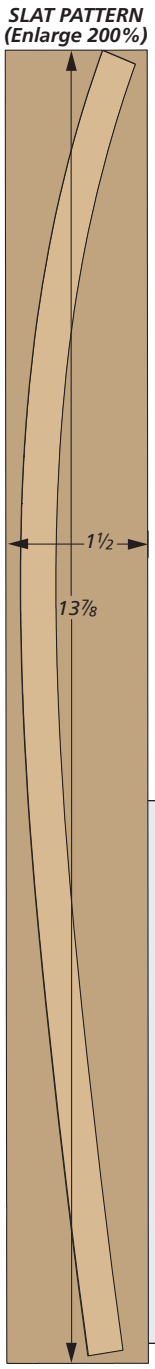

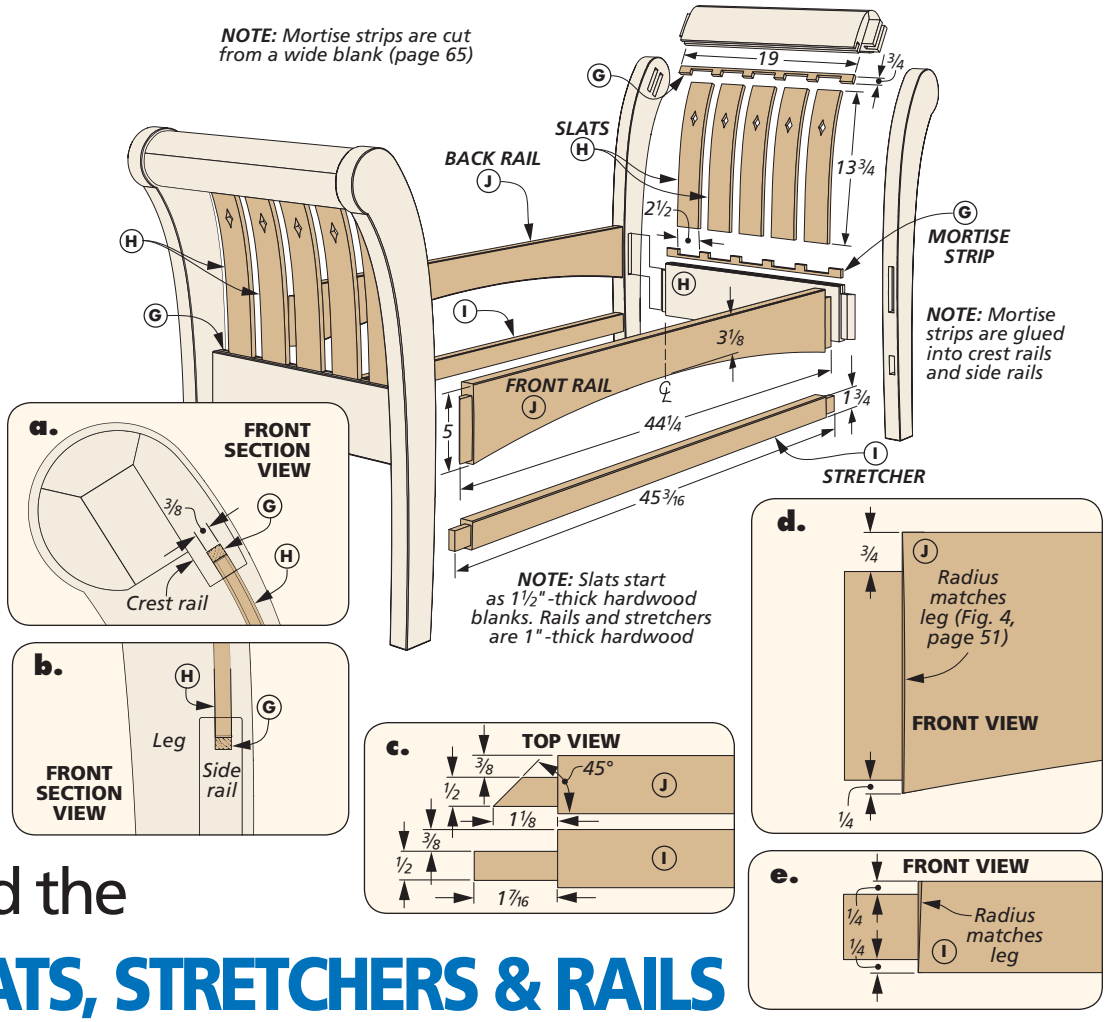

Add the SLATS, STRETCHERS & RAILS

A good portion of the challenging work on the bench is complete at this stage. The next steps will move you closer to a finished bench.

MORTISE STRIPS. I started with the mortise strips that fit the grooves in the side and crest rails. The process for making these is shown in Figure 1 below and in greater detail in Shop Notes on page 65.

MAKING THE SLATS. Next up are the curved slats. The shape of the slats is shown in the margin drawing at left, and there's also a full-size pattern available online. However, before cutting the actual slats to this shape, I recommend dry-assembling the end

How-To: MAKE MORTISE STRIPS & CURVED SLATS

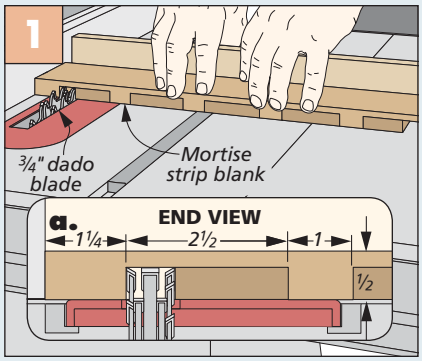

Mortise Strips. Notch a wide blank before ripping the strips to their final thickness. Check page 65 for more.

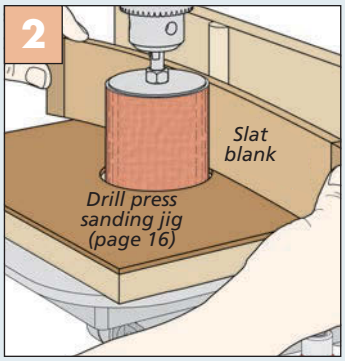

Sand Smooth. This single-point fence (page 16) makes it easy to sand each slat clean and smooth.

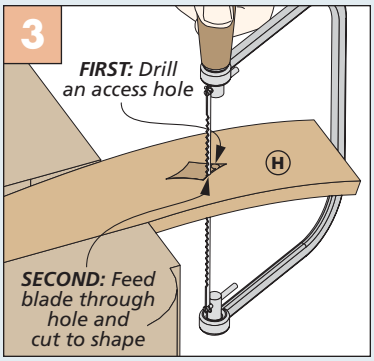

Diamond Cutouts. The thin blade of a coping saw allows you to cut the diamond shapes with ease.

assembly, making a template out of cardboard, and checking the fit of the template in the actual dry assembly. Subtle variations can change things, especially when curves are involved, so it's best to check the fit to be certain before making all ten slats.

Once you're confident the shape of your slats will fit, a band saw and sanding drum take care of the shaping (Figure 2, previous page). There's an article on this technique on page 16.

The next challenge on the slats is the diamond-shaped cutout near the top. Here again, there's a pattern on the previous page and a full-size one online. Due to the curved shape of the slats, I opted to cut these with a coping saw, as shown in Figure 3 (previous page).

END ASSEMBLY. At long last, you're ready to glue and clamp the two end assemblies together. A good overview of the process is shown in Figure 1. I found it easiest to assemble with one leg face-down on the workbench, so I could slide in the other parts from above before gluing and clamping it all together.

CONNECTING THE ENDS. If you've made it through the end assemblies, you're officially done with the most challenging part of the project. Now all that's left is joining them to one another with front and back rails and stretchers.

STRETCHERS. The stretchers are the simplest parts that form this connection, so I started with those. After cutting them to size, cut the tenons on the ends with a dado blade. Note that the tenons are centered on the width of the stretchers but offset on the thickness (detail 'c,' previous page).

FRONT & BACK RAILS. Now turn your attention to the front and back rails. The tenons are made in much the same way as the others on the project, but they are offset on both the width and thickness (details 'c' and 'd,' previous page). Next, tilt your table saw blade and miter the ends of the tenons. This way, they'll fit nicely alongside the tenons on the side rails when they're inserted into the mortises in the legs.

These rails also have a gentle arc along the bottom edge. This is quick work at the band saw, as shown in Figure 2 above. Then sand them smooth.

How-To: ASSEMBLE THE BENCH

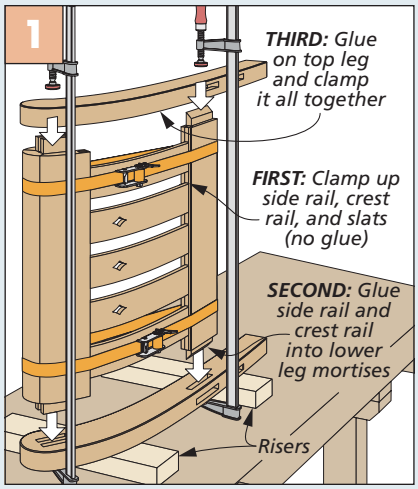

Assemble Ends. It's easiest to assemble the ends by starting with one leg down on the workbench.

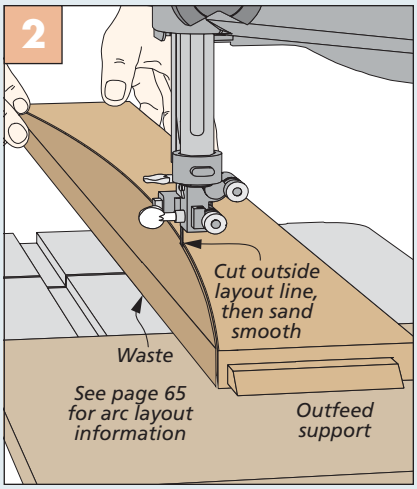

Rail Arcs. After laying out the curved arcs on the front and back rails, cut them to shape at the band saw.

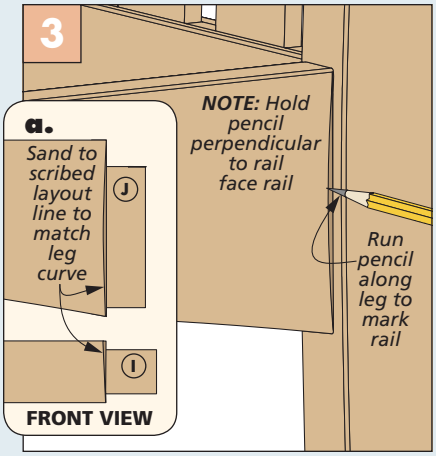

Scribe Curves. Insert the rails and stretchers in the mortises, and transfer the curves from the legs to those parts.

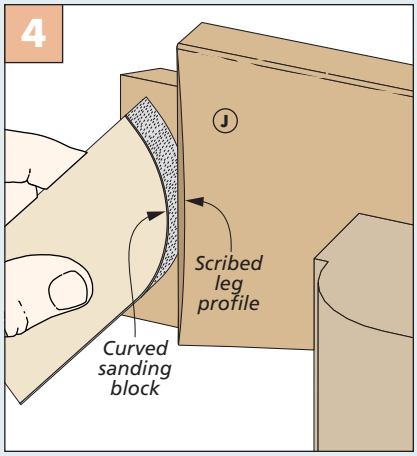

Sand to Fit. A little hand work with sandpaper ensures a smooth fit between the parts.

TENON SHOULDER SHAPING. Due to the curved profile of the legs, there's one more additional challenge to the stretchers and rails that needs to be addressed: The tenon shoulders need to match the curve of the legs.

I found the best way to approach this challenge was with a bit of hand work to create the profile. First, I inserted the parts as far as they would go into the mortises in the legs, and used a pencil to scribe the profile of the leg onto the tenon shoulder. Figure 3 shows the process I used to do this on the front and back rails, and the stretcher is scribed following a similar process.

After that, I simply worked toward the line with files, chisels, and sandpaper to shape the tenon shoulders to fit snugly against the curved leg edges. Figure 4 above gives you the idea.

FINAL ASSEMBLY. Once you achieve a nice fit between the rails and stretchers and the legs, then the basic structure of the empire bench is finally ready to come to life. You should find this assembly much more straightforward than the end assemblies. You just fit the front and back rails and stretchers into the mortises in the legs, and use clamps to bring it all together. Now's a good time to stain the bench, as well (Sources, page 67).

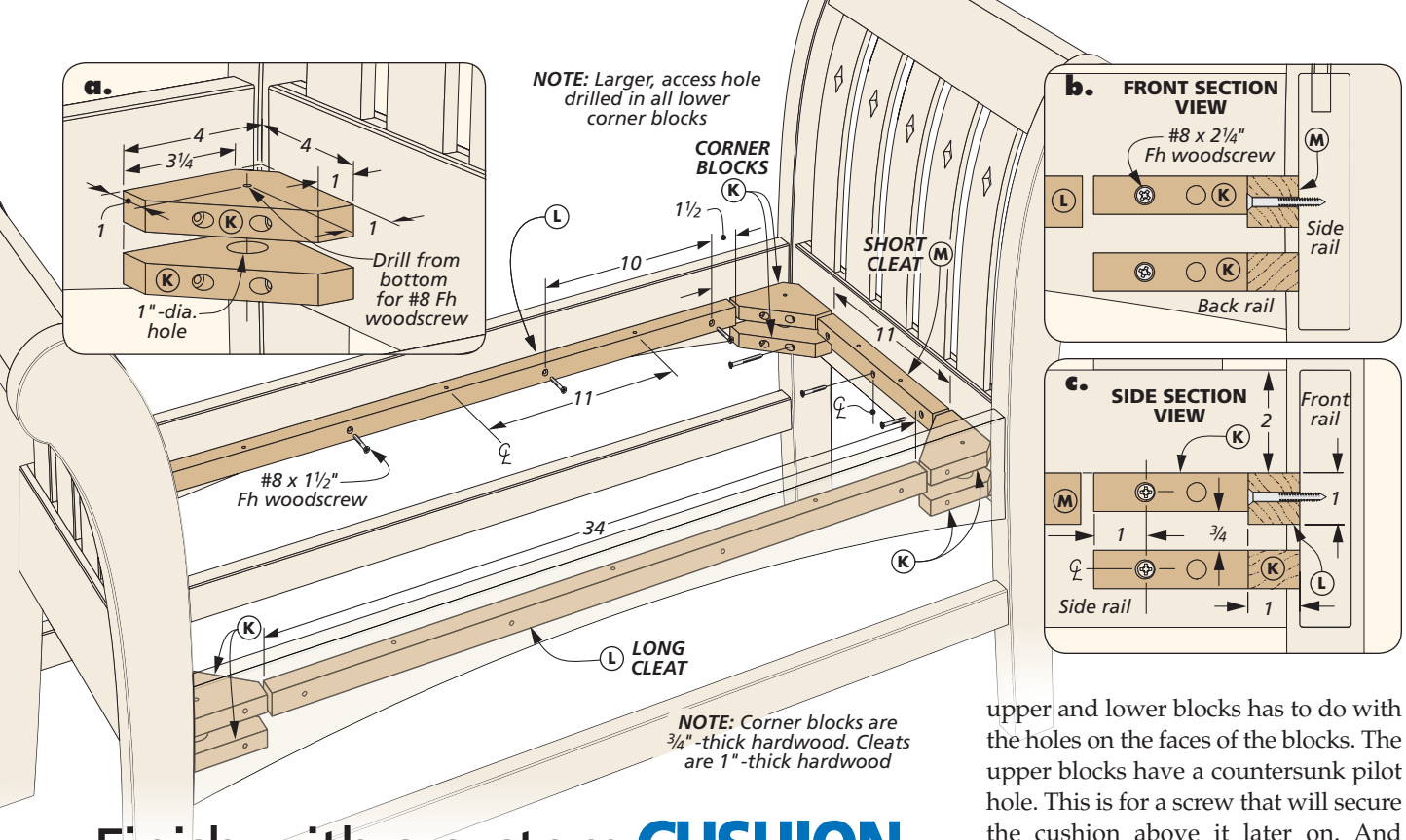

Finish with a custom **CUSHION**

Your empire bench is nearing completion. All that's left at this stage is to add some cleats, corner blocks, and the upholstered cushion. The cleats provide a mounting surface for the cushion. The upper corner blocks also support the cushion, while all eight blocks add additional reinforcement to the bench structure to ensure a strong assembly that will last for years to come.

CORNER BLOCKS. I started with the corner blocks. The basic shape of all eight is the same and shown in detail 'a' above. After cutting them out and clipping the corners, you can set the blocks on edge in order to drill the counterbored pilot holes for screws. The basic overview of each of these steps is shown in the drawings in the "How-To" box below. The only difference between the upper and lower blocks has to do with the holes on the faces of the blocks. The upper blocks have a countersunk pilot hole. This is for a screw that will secure the cushion above it later on. And the lower blocks have a larger access hole drilled in them. This allows you to reach through the lower block with a screwdriver in order to drive the screw through the upper corner block into the cushion panel.

CLEATS. In a project full of curves and rounded parts, the cleats are a welcome respite at this stage. The main drawings and detail 'c' above have all the dimensions you need to make them. The cleats have two sets of countersunk

How-To: MAKE THE CORNER BLOCKS

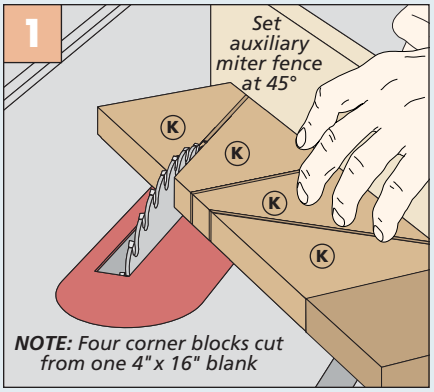

Cut Blocks. You can make four corner blocks from one blank by laying out and cutting them as shown above.

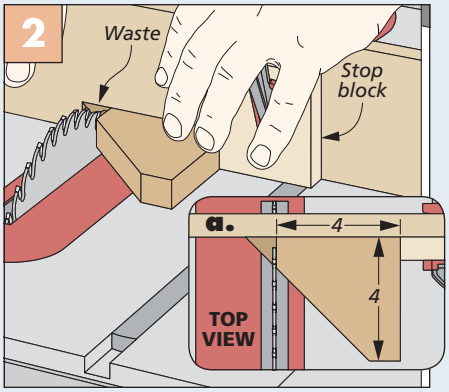

Trim Corners. Use a stop block to trim the corner off each block. Flip the block to cut the opposite corner.

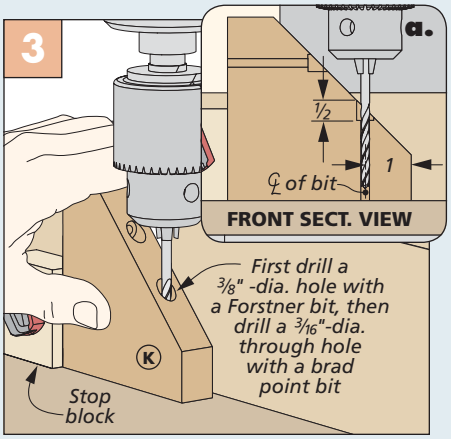

Counterbored Holes. Use a tall auxiliary fence at the drill press to support the blocks while boring the holes.

pilot holes for screws: One set for securing the cleats to the bench rails, and another set for securing the cushion panel. After aligning and screwing the cleats in place on the bench rails, the woodworking portion of this project is officially complete.

SHOP-MADE CUSHION

However, there's still one final detail of this heirloom bench to address — the cushion. But really this is more of an upholstery task. Between the information provided here and in Shop Notes on page 64, you should find that the cushion is quite manageable, even if you've never done any upholstery work before. (Of course, you can also find someone in your area to make you a cushion for the bench if you're not comfortable tackling this part of the project yourself.)

The drawings on the right provide an overview of the basic cushion construction. It consists of a plywood panel that you'll cut to size to fit the bench, a thick layer of high-density foam, a thin layer of batting, and the faux leather that we chose for the upholstery. You'll find more information on that in Sources.

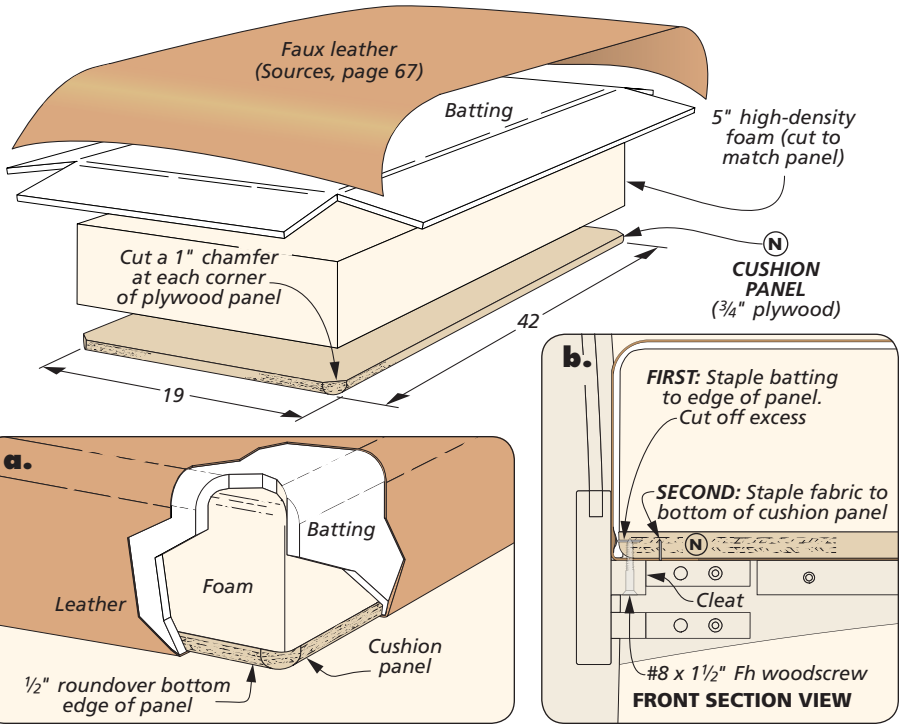

Really, most of the work on the cushion involves cutting parts to size, just as in woodworking. Then it's a matter of wrapping the fabric around the cushion and stapling it to the plywood on the bottom face. Refer to Shop Notes on page 64 for in-depth details on this process.

When the cushion is complete, you can set it in place on the cleats and corner blocks, and secure it with screws from underneath. At long last, you finally have a regal piece of furniture in your home. Everyone is sure to enjoy its style and comfort, even if they're not descended from royalty. W

Materials, Supplies & Cutting Diagram

A	Legs (4)	1½ x 8½ - 33
B	Side Rails (2)	1 x 5 - 21¼
C	Inner Rails (2)	1½ x 2½ - 21¼
D	Arm Rest Short Sides (2)	1½ x 4 - 19
E	Arm Rest Tops (2)	1½ x 4½ - 19
F	Arm Rest Long Sides (2)	1½ x 5 - 19
G	Mortise Strips (4)	¾ x ⅜ - 19
H	Slats (10)	1½ x 2½ - 13¾
I	Stretchers (2)	1 x 1¾ - 45 3/16
J	Front/Back Rails (2)	1 x 5 - 44¼
K	Corner Blocks (8)	¾ x 4 - 4
L	Long Cleats (2)	1 x 1 - 34
M	Short Cleats (2)	1 x 1 - 11
N	Cushion Panel (1)	¾ ply. - 19 x 42

- (16) #8 x 2¼" Fh Woodscrews
- (24) #8 x 1½" Fh Woodscrews
- (1 yd.) Faux Leather
- (1 pc.) 5" High-Density Foam (24" x 72")
- (1 yd.) Batting
- ½" Staples

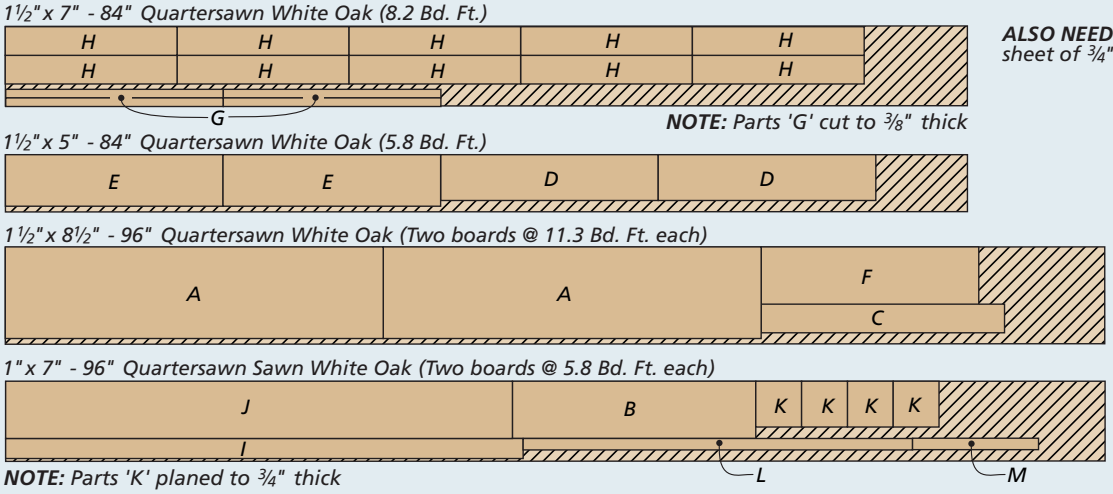

ALSO NEEDED: *One 24" x 48" sheet of ¾" maple plywood*

skillbuilding Handsaw Techniques

▲ A hold-down mounted in one of the dog holes of the sawbench prevents the workpiece from shifting during a cut.

When the lumber for my next project comes into the workshop, the first tool I reach for is a crosscut handsaw. The advantage is that a handsaw and two sawbenches (like the ones shown on page 22) create a compact, cordless workstation I can set up anywhere.

In a short time, I can transform long boards into rough blanks ready for jointing and planing. From a working perspective, the height of the sawbench is ideal. It allows you to apply maximum power to the saw while your body holds the workpiece steady.

Setup, layout, body position, and technique work together to help you get the most from a saw and sawbench. You can see how these elements come together when breaking down boards. The process helps build muscle memory and hand-eye coordination for other sawing and woodworking tasks.

SETUP FOR CROSSCUTTING. The photos on this page show how to set up sawbenches for crosscutting. The key here is support. As you near the end of a cut, the last thing you want is to have an unsupported part of the workpiece fall away, leaving a jagged splinter.

When making a cut near the middle of a board, position a sawbench on either side of the cut line. I like to orient the sawbenches parallel with the length of the board. This is shown in the photo above. Your body acts as a clamp holding one side of the board. For the other side, place the sawbench to keep the board balanced when it's cut free.

The lower left photo on the previous page shows the arrangement if you only need to cut away a small amount.

SIMPLE LAYOUT. Breaking down boards doesn't require much layout, as shown in the photo below. I'm not looking for exact lengths at this point. That being said, I make an effort to make the cuts as accurately as I can to practice good form. If the board doesn't have a straight edge to register the head of the square, simply use the ruler to create a line.

BODY POSITION. With the workpiece set up and marked, you can get into position. Most of the time, I like to place one knee on the workpiece to stabilize it. The other leg tucks in right behind the board to prevent it from shifting.

The real key to making square, accurate saw cuts is aligning your arm with the saw, as in the upper right drawing.

▲ Use a tape measure, combination square, and a pencil to mark clear lines for cutting with a handsaw.

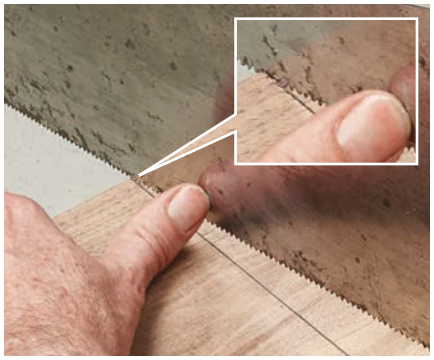

▲ The thumb of your other hand accurately positions the saw blade right on the layout line as you establish the kerf.

Then position yourself so that you can clearly see the layout line.

SAW TECHNIQUE. Now it's time to start moving the saw. I use the thumb of my non-dominant hand to align the blade, as in the photo above. Then, holding the saw at a low angle, make several short forward strokes to start the cut. The idea is to apply as little pressure on the saw as possible — as if you're trying not to saw. (The box on pages 56 and 57 shows several saw options.)

With the kerf established, you can lengthen the strokes to use as much of the blade as possible. Increasing the cutting angle helps it cut more efficiently (detail at right). You don't need to worry about the speed of each stroke. A full stroke and steady rhythm is more important to establish. Avoid twisting your upper body, which introduces a side-to-side movement of the saw.

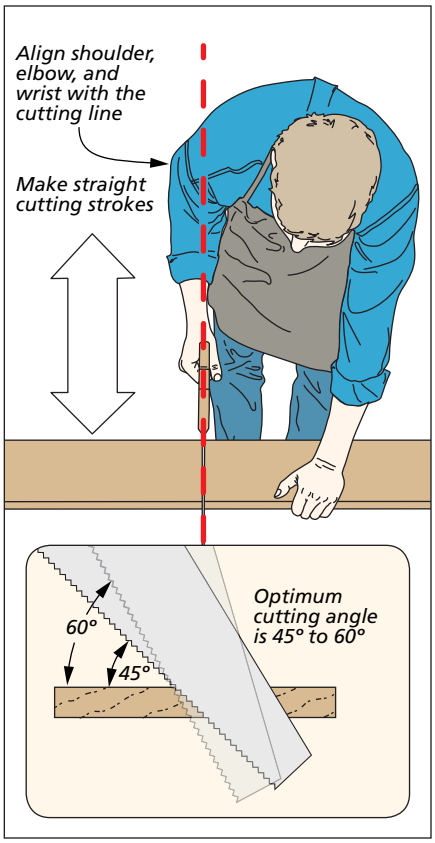

A consistent rasping sound means everything is going well. If you hear a twang and see the tip of the blade flapping, something is misaligned. Check your arm position and try again. I've noticed that my elbow has a tendency to drift away from my body, so I try to keep it tucked (but not tight) against my side.

As you approach the end of a cut, it's time to slow your pace and drop the blade angle to avoid causing a splinter.

RIPPING BOARDS. Crosscuts make up most of the work I do with a handsaw. However, there may be times when you need to make a rip cut on a board. Making a rip cut with a handsaw requires a few slight changes.

The main differences have to do with your orientation to the board and your stance. Position the cut line directly above the ripping notch for the best support, as shown in the left photo.

After just a handful of cuts, you'll notice a big improvement in the accuracy and ease with which you can make cuts. Then you can start applying those skills to other saw cuts.

▲ Stand with your body parallel with the length of the board. The knee on your dominant side rests on the workpiece. If the cut is long, locate another sawbench just ahead of you. This provides "outfeed" support for the board and prevents vibration.

SAWING JOINERY

Beyond breaking down boards, you can use a handsaw to cut simple joints, too. Notches are good examples of this. On many projects, notches of some sort are used where project parts meet or cross each other. You can cut these basic joints with a handsaw in short order.

I'll cover two common notches and how to cut them. Depending on the saw you use and the visibility of the joint, you may need to factor in some final cleanup work.

CORNER NOTCH. Where the bottom panel of a case piece meets the legs, the corners of the panel are often notched to wrap around the legs. With larger panels, I like to make the cuts on a sawbench for better support.

Naturally, the starting point is a little layout work. I prefer a two-step layout. A couple of pencil lines help define the notch clearly. Then I like to follow up by scribing the notch with a knife, as shown in Step 1. This serves as a guide for cleaning up the cut with a chisel.

Two cuts define the notch: a crosscut and a rip cut. It's a good idea to make the rip cut first (Step 2). This prevents the waste piece from breaking off prematurely, which could increase the work of trimming the notch.

With the panel saw shown here, stay just to the waste side of the layout line. Work your way until the teeth of the saw come to the intersecting line. As you come to the end of the cut, raise the saw vertically to avoid cutting past the line.

The crosscut goes pretty easily, as shown in Step 3. As I said before, you can use a chisel to pare away any remaining waste as well as remove the saw marks from the edges.

After drawing the line with a pencil, use a knife to scribe the line. This defines the notch for cleaning up the saw cut.

Cutting on the waste side of the line means you can remove blade marks without making the notch too large.

The crosscut removes the remaining waste from the notch. Use chisels and files to work down to the layout lines.

Handsaws: FOUR GOOD OPTIONS

The saw you choose to use at a sawbench requires a balancing act between two primary factors: speed and quality of cut. If you don't already own a handsaw, it pays to think about how you would plan to use it and what expectations you have for the results.

The four types shown here provide a range of options. Should you decide to perform more operations by hand, you may end up getting more than one.

CROSSCUT HANDSAW. The usual pick for breaking down boards at a sawbench is a full-size crosscut handsaw (upper right photo). A crosscut saw even works fine for the occasional rip cut. The blade typically extends 26" - 28", with 8 to 11 teeth per inch, as shown in the inset photo. The long blade combined with large teeth mean these saws cut through all kinds of boards in short order. The flip side of that speed is the quality of cut. The saw leaves tearout on the back face of the workpiece. And the cut edge will likely have noticeable blade marks.

PANEL SAW. The lower right saw looks a lot like the handsaw, but the blade on a panel saw is shorter (20" - 24") and has more teeth per inch (11-14). This means the saw cuts a little slower than its big brother but

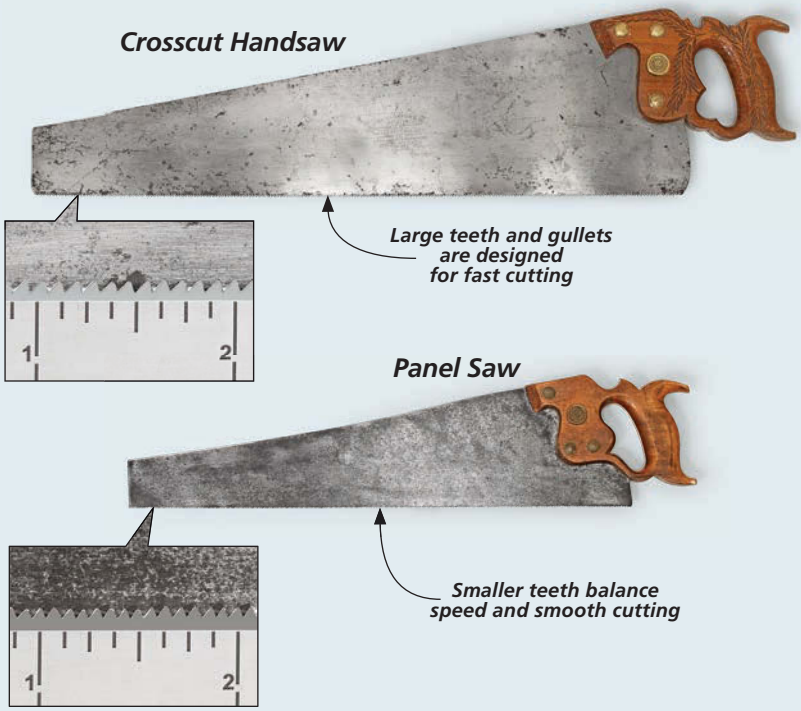

▲ Once the layout is complete, make two cuts to define the sides of the notch. Cut on the inside of the layout lines.

▲ Relief cuts divide the waste into smaller pieces. Use a chisel and mallet to chop out the majority of the waste.

▲ Fine paring cuts made by pushing the chisel along the baseline and sides create smooth, square joint surfaces.

EDGE NOTCH

A similar joint to a corner notch is cutting a notch somewhere along the length of a board or on a panel. This can be used to create a lap joint or provide clearance for a vertical divider.

After taking care of the layout in the same way as the corner notch, define the sides of the notch with a pair of saw cuts, as you can see in Step 1. A fine-toothed back saw allows me to cut much closer to the lines and leaves a smooth surface.

The next step is to make relief cuts between the shoulders. This helps to speed up the process of removing the waste using a chisel. A few firm smacks with a mallet frees blocks of waste, as you can see in Step 2. To avoid going past the baseline, position the chisel to remove about half the waste. Then reposition the chisel to remove half of the remaining waste material. Repeat this process until you are about 1/16" away from the bottom of the notch.

It's time to set aside the mallet and pare away the waste down to the line. Rest the chisel on the workpiece and place one hand on the blade. The other hand is on the handle. Use your body weight to press the chisel down with the front of your shoulder (Step 3).

Even if you rely on power tools for most of your woodworking, learning hand sawing skills remains useful. Once you've mastered basic cuts, it opens the door for cutting fine joinery. W

leaves a much smoother edge. If you intend to do more than break down boards, this is a good all-around saw choice.

TOOL BOX SAW. You're sure to have seen saws similar to the one shown below at any home center. These plastic handled saws have blades that are 18" - 24" long.

The teeth really set these saws apart. The aggressive teeth have several cutting edges. They're induction-hardened, so they stay sharp a long time and work for a variety of tasks like cutting plywood, branches, PVC, etc. These low-cost saws make quick but quite coarse cuts and are best suited for basic stock breakdown rather than cutting joints.

BACK SAW. The final choice, a back saw, may seem surprising. A back saw is usually used at the workbench for cutting joinery. But with large panels or long parts, it may be easier to use the saw at a sawbench instead.

A back saw blade is 12" - 14" long. With 14 or more teeth per inch, it cuts slower than the others but leaves a smooth surface that requires no further work. A back saw can be set up for ripping or crosscutting. However, I prefer a crosscut back saw for versatility. The heavy reinforcing back limits the depth of cut, which means a back saw is best for cutting jointery and creating fine details.

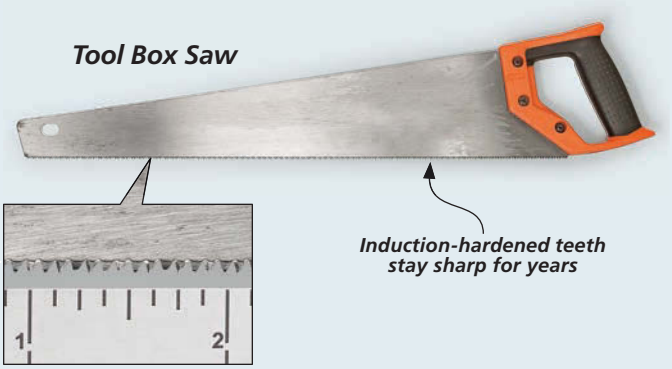

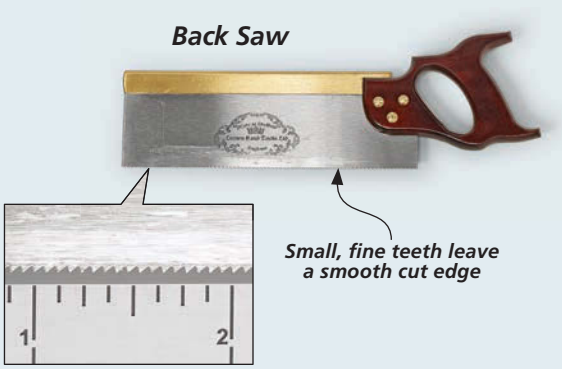

working with Reinforced Veneer

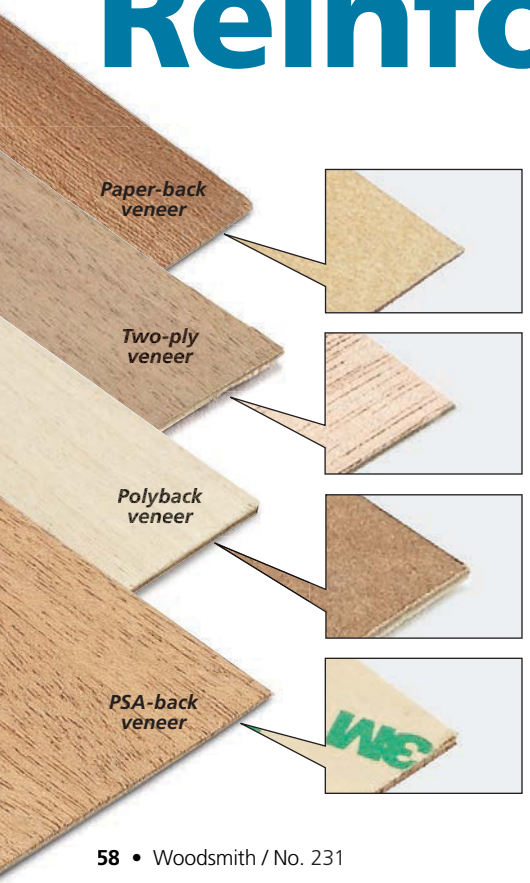

In the past, I often used a lot of raw wood veneer to dress up areas of my projects such as tabletops or door panels. As the name implies, raw veneer is nothing more than very thin sheets of wood. You can buy larger pieces at specialty retailers or make your own by slicing thin layers of boards at the band saw.

THE POWER OF REINFORCEMENT. In recent years, however, my attention has been turning more toward reinforced veneers. The "show" layer of these veneers is the same as raw veneer — just a thin layer of wood. But each piece is attached to some form of backing layer, which gives the veneer a number of advantages over its raw counterpart.

WHY REINFORCED VENEER? There are several reasons why I seem to use this type of veneer more often these days. For one, virtually any species of wood is available in a reinforced veneer now. Plus, there are a range of backing options, depending on your preference or intended use of the product.

Reinforced veneers are also available in sheets (or rolls) of many different sizes. So whether you want to veneer a small box or a large tabletop, you should be covered. But perhaps most important, I just find this type of

veneer easier to work with overall than raw veneer, whether I'm cutting it or applying it to a substrate.

The reinforcement layer makes it lie flatter and smoother than raw veneer. Plus, it's much less prone to chipping or curling. It also won't show glue bleed-through like raw veneer does. And the application process is also a lot simpler.

TYPES OF REINFORCEMENT. Some of the different kinds of reinforced veneers are shown in the bottom left corner of the previous page. The most common is paper-back veneer, which has a thin paper backing behind the veneer. This is probably the thinnest option, which means the edges won't show after application. There are also veneers reinforced with a second layer of veneer, often called two-ply or wood-on-wood veneers. This type of veneer is stronger but also a little thicker.

Some paper-back veneers are available with a self-adhesive backing. Simply peel away the backing and press it in place.

A rubber J-roller is standard equipment for rolling reinforced veneer smooth and flat to the substrate after gluing it in place.

Cutting reinforced veneer is a simple process. A utility knife or even scissors can handle it with ease.

Veneers reinforced with foil, plastic laminate, and other, more durable backers are available, but these are typically reserved for commercial use or large-scale manufacturing jobs. Among this category, though, there's a fairly new option that I was interested in having a look at, and that's polyback veneer. This type of veneer has a polymer resin backing, and many veneer makers are viewing it as a replacement for some of the other commercial forms of veneer. Though it's a bit thicker than the other reinforced veneers, it's very durable, flexible, and strong.

Another great option is a paper-back veneer with pressure-sensitive adhesive (PSA) already applied to the backing. As you can see at left, this can greatly ease the application of the veneer.

A WORD ON THICKNESS. While some of the thicker reinforced veneers are more durable and flexible, they also can leave a visible edge when trimmed flush with a surface. However, since the edges in most of my projects are covered with strips of edging or molding, this really isn't a problem.

WORKING WITH REINFORCED VENEERS. With reinforcement added, these veneers lend themselves to a lot more potential uses than raw veneer. For example, they can be cut cleanly to virtually any shape with utility knives, razor knives, or scissors (upper right photos). This makes miters, inlay patterns, and other elaborate shapes easier to add to your projects.

The reinforcement eliminates the possibility of chipout when flush-trimming veneer. It routs smoothly and cleanly.

They also lie flat and smooth when applied. Typically, reinforced veneer can be applied with contact or spray adhesive, using dowels, strips of hardboard, or other materials to keep the surfaces separated until you're ready to adhere them (main photo, previous page). Then the veneer can be smoothed out using a roller (lower left photo). The reinforcement also makes trimming the veneer flush with the surface a worry-free process after application (photos above).

If you'd like to try reinforced veneer for an upcoming project, check out Sources on page 67 for your options. You're sure to enjoy its ease of use. W

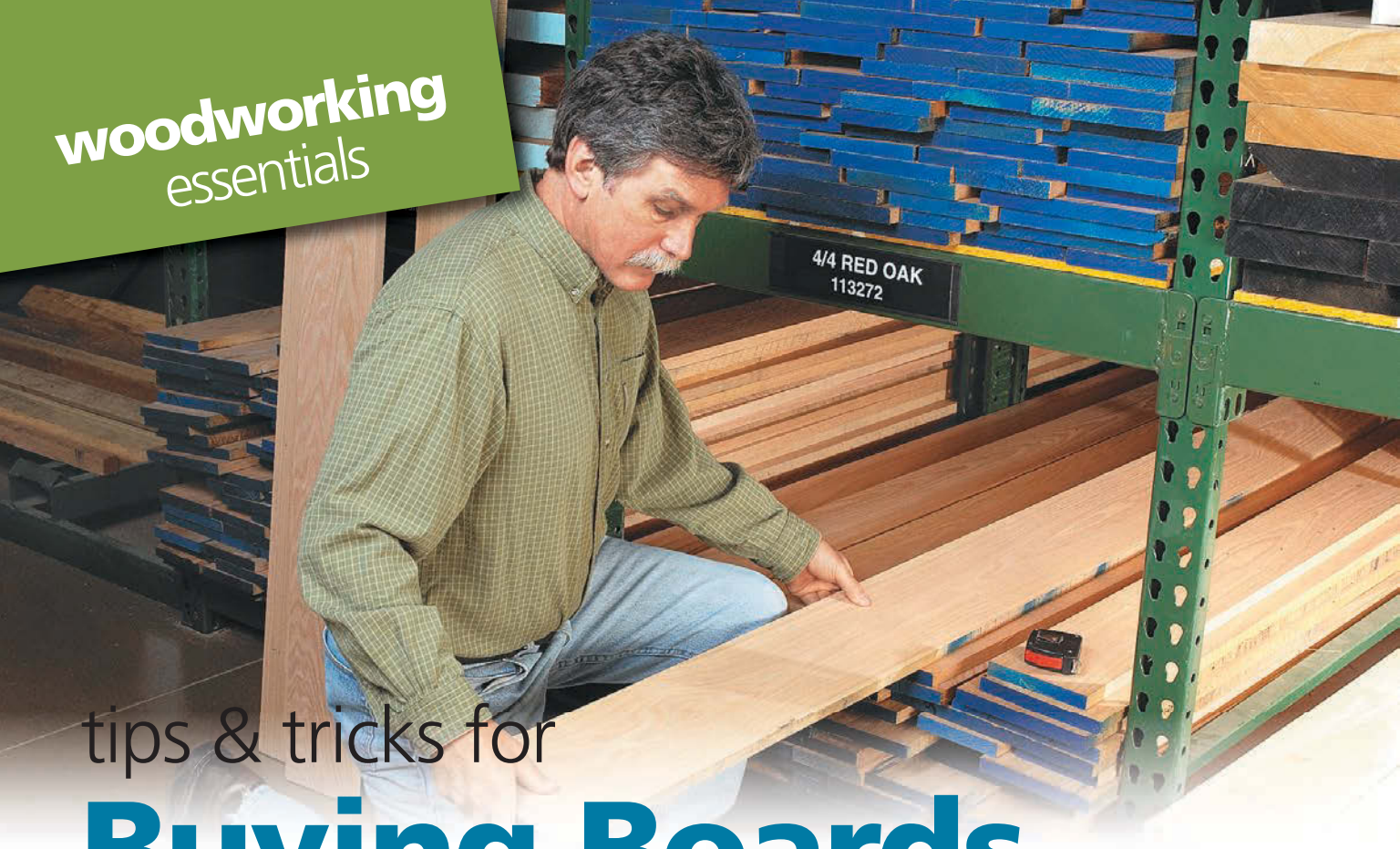

woodworking essentials

tips & tricks for

Buying Boards

As your interest in woodworking grows, most woodworkers find that a natural evolution occurs: The pursuit of lumber for projects becomes more involved and elaborate. Beginners often start by perusing the limited options available at home centers but are eventually drawn to the greater variety of species and thicknesses available at lumberyards or specialty hardwood stores.

To successfully navigate a trip to the lumberyard and end up with exactly what you need for your project, it helps to be armed with the necessary knowledge. Here are some hints to keep in mind as you get ready to round up the material for an upcoming project.

#1: DETERMINE YOUR LUMBER NEEDS

The first consideration before heading to the lumberyard is doing some calculations on your material requirements. Usually, you're buying lumber for a specific project, so you should have a cutting diagram to guide you on your way.

As loyal *Woodsmith* readers are aware, we provide you with both the materials list and cutting diagram for help in choosing boards for a project. Of course, the reality is that you rarely find boards that look exactly like the ones shown in our cutting diagrams. Unlike the uniform boards you often find in home centers, boards at hardwood dealers are typically random widths and lengths. This can make finding what you need a bit of a challenge.

Considering this, the main factors to keep in mind when determining your needs are the different thicknesses of boards, the species, and the overall board footage of each kind. (If the project calls for ½"-thick (or less) boards, this will be calculated in square footage rather than board footage.) Based on those numbers, you can calculate what types of boards you'll need, and how many of each you'll want to buy. The diagram at right will help you determine how to make these calculations correctly.

#2: DECIPHER LUMBERYARD LINGO

Once you have a rough idea of the species and amount of lumber you need figured out, you're ready to head to the store to pick out boards. But you'll likely run into a little confusion here: The boards in most woodworking plans have thicknesses such as ¾", 1", 1½", and on. The boards at the lumberyard, on the other hand, are labeled

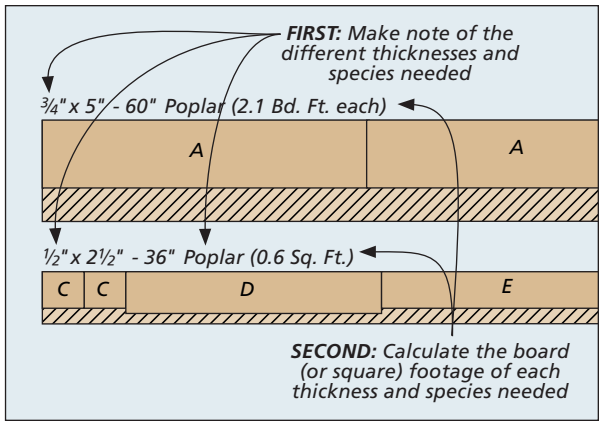

according to the "quarter" system (4/4, 5/4, 8/4, etc.). The way this system works is that each quarter equals ¼" on a roughsawn board. Of course, the actual dimension gets smaller if the board is surfaced on one face (S1S), or both faces (S2S). S3S means one of the edges is surfaced and ripped straight, while S4S means both edges and faces are surfaced and ripped (photos, right).

Some woodworkers prefer to use roughsawn boards. This gives you more thickness to joint and plane the board down to the desired size. It also can be cheaper to buy rough boards. At many lumber centers, though, all you'll find is S3S lumber or S4S lumber. So if you need ¾"-thick parts, you'll start with 4/4 lumber, which is about 13/16" thick after surfacing. The chart below provides the actual thickness of many types of lumber according to the quarter system.

Beyond thickness, you also need to pick boards of specific lengths and widths to get the sizes of parts you need from them. For example, you'll probably want all the rails and stiles for your doors from the same board. So you'll need to choose boards that are wide and long enough to give you these options.

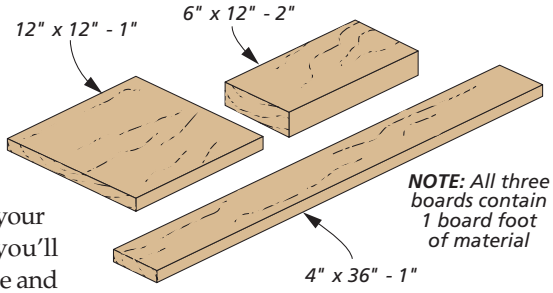

#3: CALCULATE BOARD FOOTAGE

Once you've found boards to your liking, it's time to crunch the numbers to make sure you're getting what you need. And that requires calculating the board footage of the boards (or square footage in the case of ½"-thick boards). So bring along your tape measure and calculator when selecting boards.

The basic formula for board footage is simple: It starts with multiplying the width by length in inches, and then dividing by 144. You'll then multiply this number by 1 for a 4/4 board, 1.25 for 5/4, 1.5 for 6/4, and so on. You'll make this calculation for each board and add them together before checking out.

Most lumberyards have an associate on hand to help add up board footage. As you can see above, one board foot can look a lot different on different boards.

It's generally a good idea to get 20 to 25 percent more wood than a project calls for. This gives you a little "breathing room" for mistakes or to find the perfect part on each of your boards. You can always use any extra lumber for a different project down the road. W

Hardwood Dimensional Lumber Sizes

"Quarter" Designation	Rough Thickness	Actual Surfaced Thickness
4/4	1	13/16 - ⅞
5/4	1¼	1 1/16 - 1⅛
6/4	1½	1 5/16 - 1⅜
8/4	2	1¾ - 1 13/16
12/4	3	2¾ - 2 13/16

How-To: CHOOSE BEAUTIFUL BOARDS

The numbers involved with choosing boards are important, but just as important to getting great-looking projects is the appearance of the boards. There are a few factors to consider here.

COLOR & FIGURE. When it comes to finding nice-looking boards, it pays to look for consistency in grain and color. As you can see in the photos at right, these factors can vary quite a bit, even among the same species of wood.

▲ Not only is the grain pattern significantly different, but the color varies as well.

Though boards with wavy, cathedral grain may look interesting on their own, the reality is that they're not always the best choice for furniture. If you build furniture out of wood with busy grain, you're going to notice the wood more than the project.

PLOTTING OUT PARTS. However, it's important to note that all your boards don't have to be perfect to make great-looking parts. You can always lay out your parts on the nicest-looking areas of the board, as shown in the photo at left, and then cut them free with a jig saw or band saw before continuing on.

simple & accurate Compound Miters

▲ A *Bevel Setter* gauge, like the one shown here from *Veritas*, provides an accurate means to lock in an angle.

Whether you're building a stylish decorative box with flared sides or a freestanding project like the splayed-leg sawbench on page 22, compound miter cuts add a certain amount of complexity to your work. But that doesn't mean you should shy away from these types of projects.

Most of the time, these cuts are easy to make at the table saw with just a little upfront planning. Using the table saw to complete these cuts requires tilting the saw blade to the correct angle to account for the bevel cut. The miter gauge is rotated, as well, to accommodate the miter angle of the cut.

KNOWING THE ANGLES. If you're working from a plan, the angles you'll need to set the blade tilt and miter gauge rotation will probably be provided. But if you're designing your own project, you might want to look up an online calculator specifically made for determining the angle settings you'll need. I provided the information for a couple of these in Sources on page 67. Going into a project armed with the right information is half the battle.

PROPERLY SIZED PARTS & LAYOUT. Regardless of the project, you'll typically need to start with squared-up stock that is cut slightly oversized. Some good examples of this are the legs for the sawbench, as shown in the main photo above. These legs have compound cuts at the top and bottom to give the sawbench a stable footprint.

With the squared-up blanks in hand, the next steps are to tilt the table saw blade for the proper bevel angle and set the miter gauge for the miter angle of the cut. It's tempting to rely on the built-in gauges on the table saw for this, but I find it more beneficial to use a bevel gauge to ensure the utmost in precision. But that often begs the question, "How do you set the bevel gauge to the appropriate angle?"

With the bevel gauge stock flat on the table, tilt the saw blade until it meets the blade of the bevel gauge. Be sure the blade rests against the body of the saw blade, not the tooth (inset).

To set the miter gauge angle, position the bevel gauge so the stock is parallel with the miter track. Loosen the handle on the miter gauge and rotate the fence until it's flush with the blade.

While a common protractor will work, there are specialty tools available, like the *Bevel Setter* gauge from *Veritas* shown in the bottom photo on the previous page. This ensures an accurate bevel gauge setting.

SETTING UP FOR THE CUT. Using the bevel gauge to set the tilt of the table saw blade is pretty straightforward (photo above). Just be sure the bevel gauge blade is resting flush against the body of the saw blade and not against a tooth, as shown in the inset photo above.

Setting the angle of the miter gauge is just as simple (upper right photo). Since the sawbench legs are somewhat long, an auxiliary miter gauge fence is a must to keep the parts fully supported throughout the cut. And as an extra measure of caution, I generally transfer the miter and bevel angles to the workpieces themselves to help stay organized while making the cuts, as shown at right.

CUTTING PARTS. Figure 1 below and the main photo on the previous page show the process of making the first cut on one end of a sawbench leg. After making the first cut on one end of all four blanks, rotate the miter gauge in the opposite position, as shown in Figure 2. Then, flip the workpiece over and end-for-end to make the cut.

Use a stop block clamped to the auxiliary miter gauge for the cut on the opposite end to ensure consistent part lengths. Just be careful that your waste piece falls safely away from the blade.

Since one end of the workpiece is beveled and mitered, be careful to measure from the proper point when setting the stop block. When completed, you should have two sets of opposing legs that are ready for the dado and rabbet operations. So be sure to label the parts to keep them organized.

Making compound cuts at the table saw is really not a complicated process. Just take things one step at a time, and you'll be miles ahead. W

Transferring the bevel and miter angles to the workpiece helps to orient the pieces when you're ready to make the cuts.

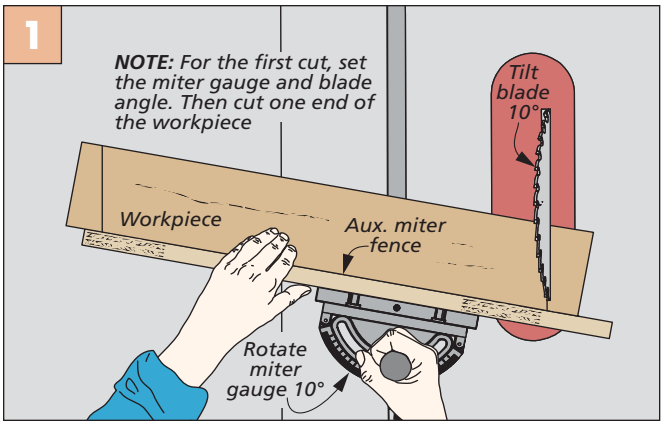

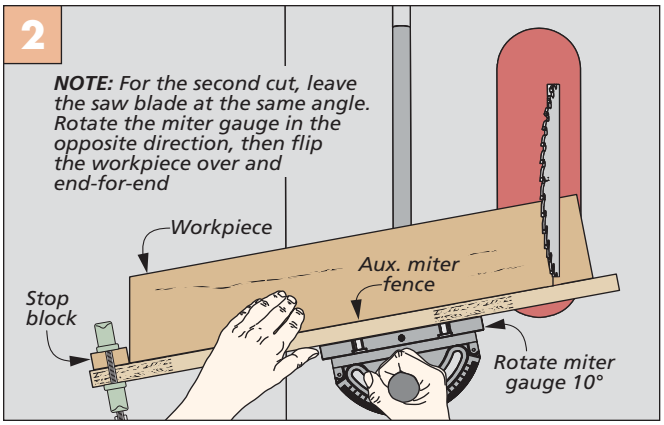

Shop-Made Bench Cushion

The empire bench on page 44 is a traditional heirloom project, so I wanted a classic cushion to finish it off in style. You can seek out a local upholstery shop to handle this task for you if desired. In my experience, though, making your own cushion is not too difficult and involves many of the same approaches as woodworking — careful cutting, measuring, and attention to detail.

CUSHION BASICS. The built-up layers of the cushion consist of a plywood panel, a thick piece of high-density foam, batting to prevent the foam from slipping, and the fabric (or, in this case, faux leather). The dimensions for the plywood panel and foam are provided on page 53 of the bench article.

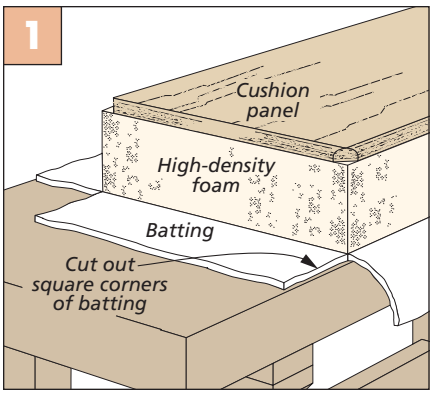

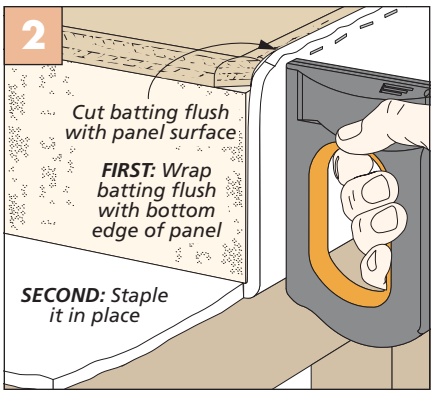

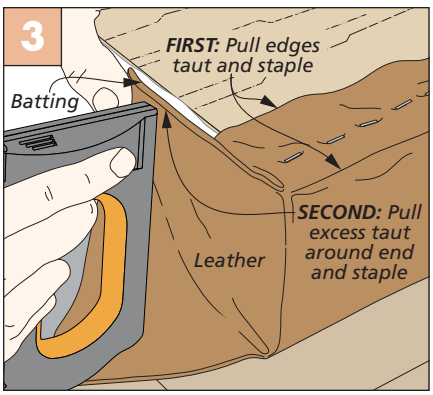

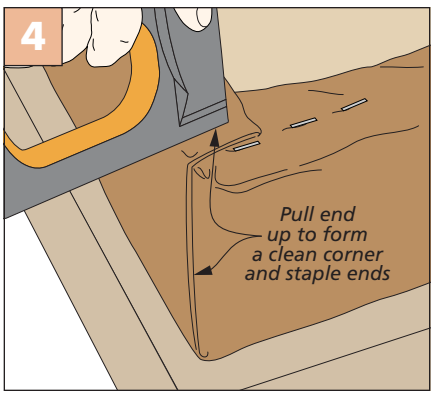

CREATING THE CUSHION. The panel and foam are the easy parts: They're cut to the same length and width and stacked so the ends and edges are flush.

The batting goes on next to fix everything in place before wrapping the cushion with the faux leather. You can get an idea of how I cut the batting from Figures 1 and 2 at left. When it was ready, I simply wrapped it around the foam and glued and stapled it to the ends and edges of the panel as shown in Figure 2.

ADDING THE FAUX LEATHER. I trimmed the faux leather so it would wrap the underside of the panel with a 2" to 3" overhang. The basic idea is similar to wrapping a present, but with a little more precision. You can start on the edges, pulling them taut and stapling along the underside to hold them in place. Then pull the excess along an end and staple it in place as shown in Figure 3.

The final step is to create a clean tuck at each corner and fold it neatly before stapling it (Figure 4 and main photo). This hides the folds behind the slats.

Lay Out & Cut Large Arcs

I often use a compass to lay out arcs before cutting them. But in the case of a very long arc (such as the one on the front and back rails of the empire bench), I rely on a slightly more convenient method.

SIMPLE LAYOUT METHOD. As you can see in Figure 1 at right, this setup is a lot simpler than a super-size compass. Just tack a brad at the centerpoint of the arc and bend a thin strip of hardboard to meet the ends. After laying it out, a simple band saw cut takes care of the rest (Figure 2).

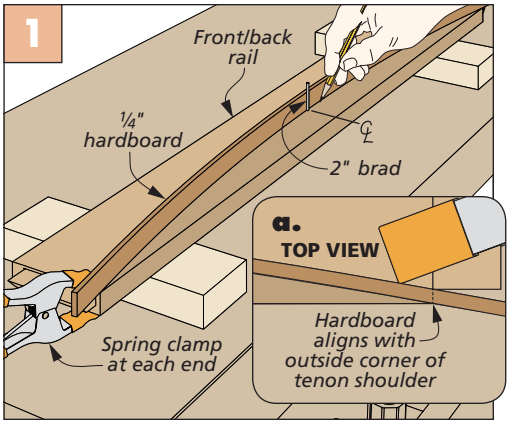

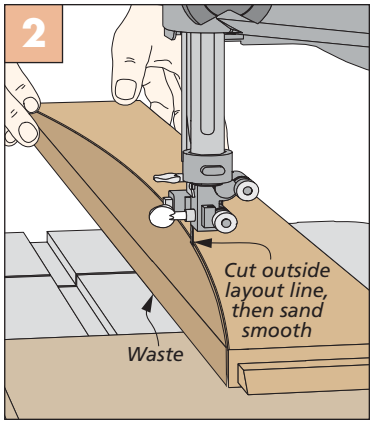

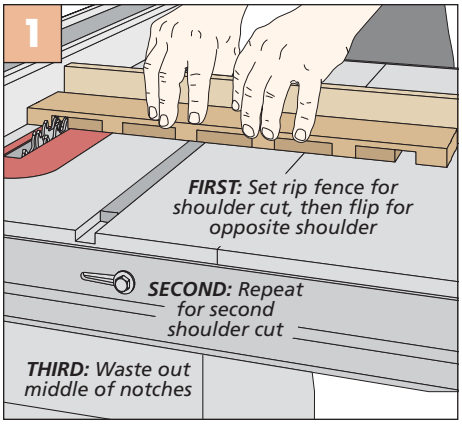

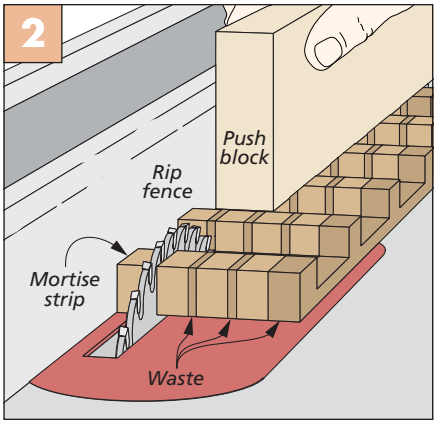

Easy Mortise Strips

For parts that require a lot of mortises (such as the rails of the empire bench), it's often easier to cut notches in a separate strip, and then glue the strip into a groove in the rail to form the mortises.

Since these mortise strips are often thin, you can make quick work of things by notching a wider blank first (Figure 1). Then, ripping the individual mortise strips free from the wider blank will provide all the parts that you need for the project, as shown in Figure 2.

Routing Jig

The sawbench on page 22 has a narrow tool well on one side of the thick top. This well is formed by using a 1"-dia. bowl and tray bit in a hand-held router. But you'll also need this simple jig, shown at right, to guide the bit.

EASY TO BUILD & USE. In order to provide a surface for the router bearing to ride against through multiple passes, make the jig from ¾"-thick MDF. Once you've constructed the jig, clamp it in place on the sawbench's top, as shown in Figure 1, below. Make shallow, clockwise passes, lowering the bit between each one. After the bit's bearing reaches the bottom of the jig, remove the jig, readjust the bit, and use the wall of the well to complete the final passes (Figure 2).

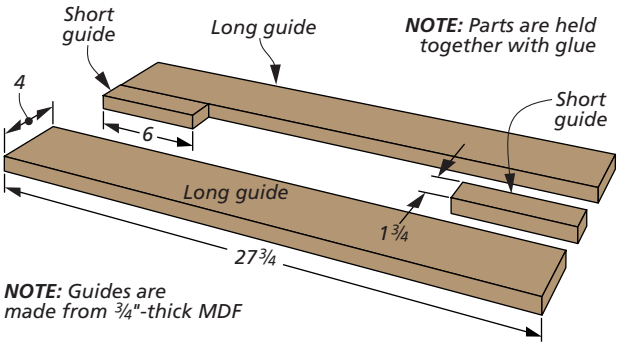

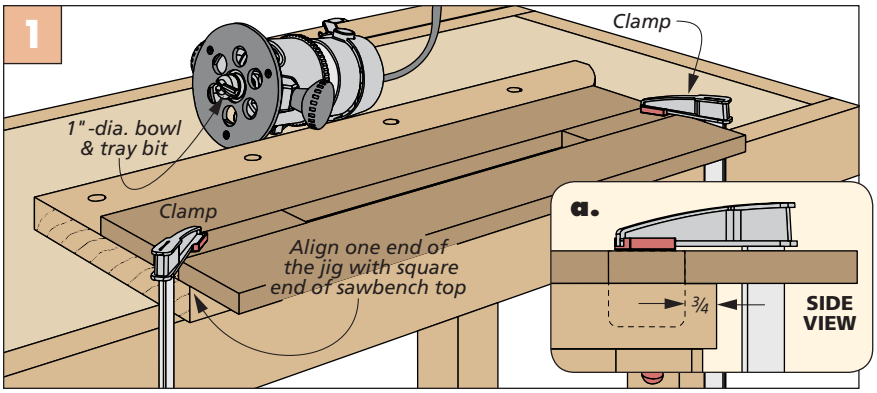

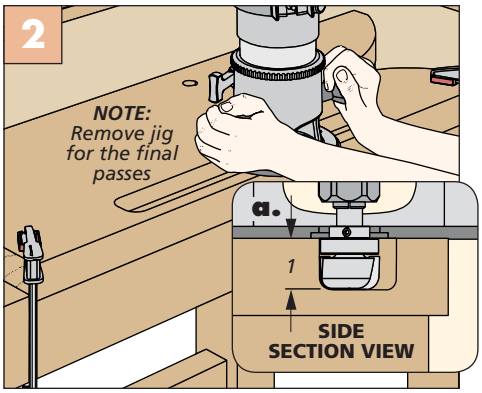

Taper Jig

Creating 16 identical tapered and beveled roof panels for the martin house on page 26 presented an interesting challenge. The solution is to make a pair of taper sleds for the table saw.

The starting point is tilting the saw blade and cutting a beveled edge on one side of each of your sled bases (Figure 1). These beveled cuts form reference edges for positioning the workpieces.

LAYOUT. Speaking of those workpieces, after cutting the panel blanks to overall size, you need to do a little layout on one of them. Figure 2 shows what's required. Marking a centerline helps you lay out the taper along each side of the panel. Then set a bevel gauge to the same angle as the saw blade to mark the taper on each end of the blank.

SLED CLEATS. With the blank in hand, set it in place on the base of one of your sleds and align the marks on each end of the panel with the reference edge of the sled, as shown in Figures 3a and 3b. At this point, you can attach the two cleats to hold the blank in position. Now it's a simple matter of cutting one edge of all the roof panels (Figure 3).

SECOND SLED. In order to cut the opposite side of the panel, you'll need the other sled. Here again, the piece with the layout marks serves as a setup gauge for attaching the two cleats, as in Figures 4a and 4b. Then in 16 cuts, you'll end up with the panels perfectly sized.

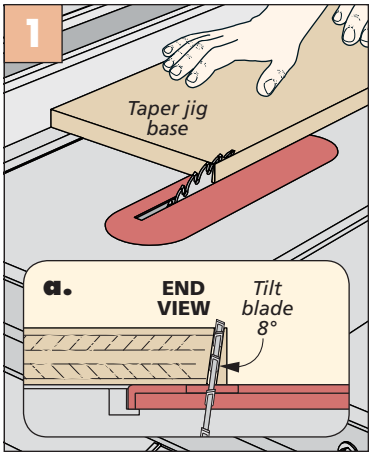

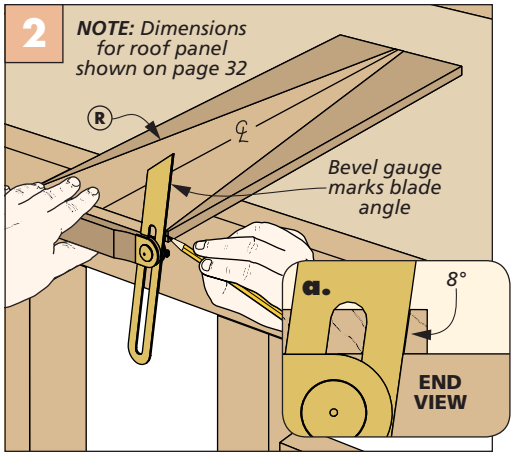

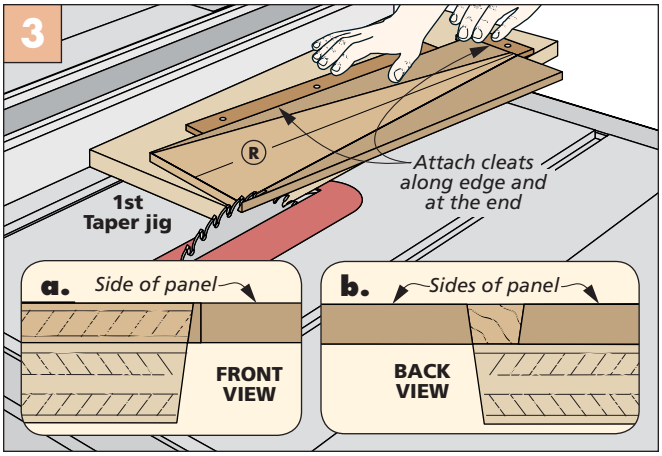

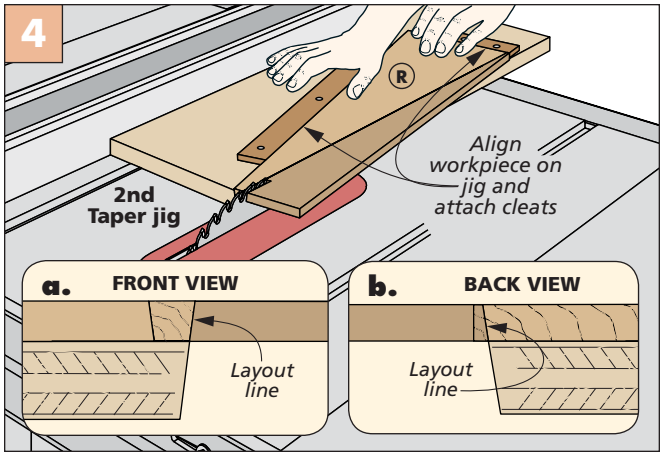

Platform Cutting Jig

The platforms of the martin house have 16 sides in order to accommodate the coopered staves that wrap around them. To save time, I devised a simple jig that allows you to cut all four platform blanks at once.

SIMPLE JIG. As you can see at right, the jig is nothing more than a base that holds the blanks with a runner to guide it in the miter slot. A dowel in the base corresponds with a centered hole in the blanks.

To use the jig, align one of the layout lines on the blanks with the reference line marked on the jig, and hold the blanks firmly as you make a cut. Rotate the blanks and repeat to cut all 16 sides. W

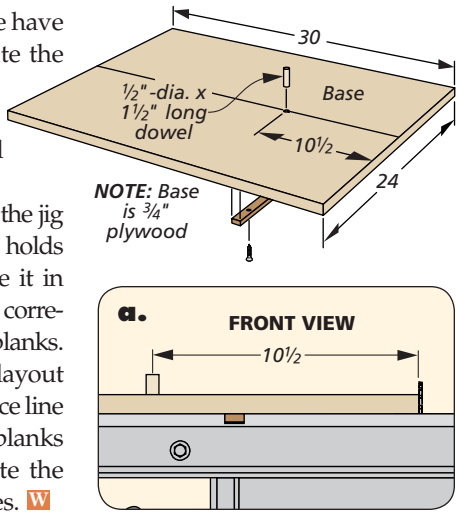

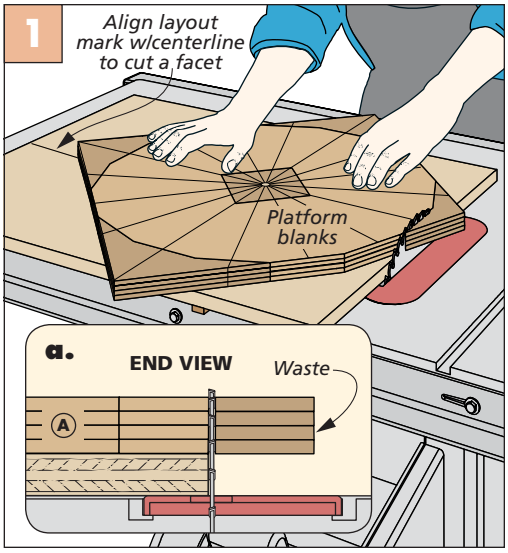

hardware & supplies
Sources

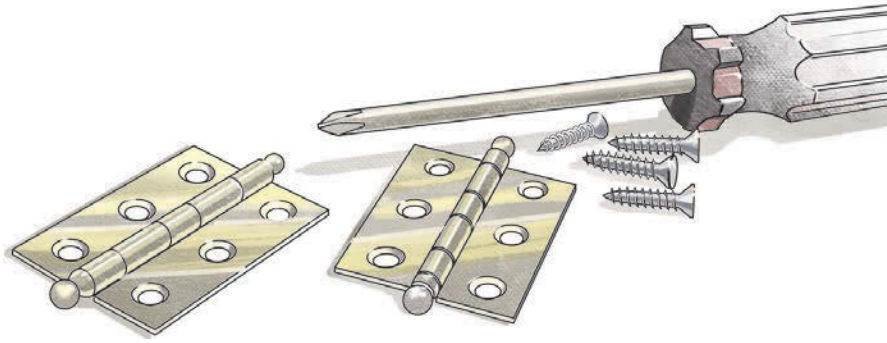

Most of the materials and supplies you'll need to build the projects are available at hardware stores or home centers. For specific products or hard-to-find items, take a look at the sources listed here. You'll find each part number listed by the company name. See the right margin for contact information.

NON-WOVEN ABRASIVES *(p.10)*

Non-woven abrasive hand pads can be found at most hardware stores and home centers, as well as from woodworking retailers. For convolute deburring wheels or non-woven abrasive belts or discs, check with an industrial supplier such as *McMaster-Carr* or *MSC Direct*.

VARIABLE-SPEED ROUTING *(p.12)*

- **Harbor Freight**
  Router Speed Control 43060

KREG PROJECT CENTER *(p.14)*

The *Kreg Mobile Project Center* is available from retailers such as *Amazon*, *Lowe's*, *Rockler* and more.

COAT RACK *(p.18)*

- **Rockler**
  2″ Z-clips 46357
- **Home Depot**
  ¼″ Steel Bar 802427

To stain the body of the coat rack, I used *Watco*'s Danish oil in "Natural." The hooks were finished with *Watco*'s Danish oil in "Dark Walnut."

SAWBENCH *(p.22)*

The sawbench was painted with two coats of *General Finishes'* milk paint in "Summerset Gold."

MARTIN HOUSE *(p.26)*

- **McMaster-Carr**
  Alum. Tubing 5177K67
- **Rockler**
  Turn Buttons 27912
  7″ Finial 22657

The sides of the martin house are painted in *Benjamin Moore*'s Regal Select "Minced Onion" (low lustre). The color for the roof, balconies, and perch rails is "Green Meadows" (low lustre).

SHARPENING JIG *(p.36)*

- **Peachtree Woodworking**
  48″ Miter Track Combo . . . 1036
- **McMaster-Carr**
  2″-dia. Std. Knob 6085K160
  1 ½″-dia. Std. Knob 60965K310
  ¼″ Lvl. Washers . . . 91131A028
  2″-dia. Thrd. Knob . . 61135K35

The *Rikon 80-805 Low Speed Grinder* is available from online retailers, including *Woodcraft*, *Rockler*, and more.

EMPIRE BENCH *(p.44)*

- **Rockler**
  Cabinet Scraper Set 45260
- **Fabric.com**
  Ostrich Faux Leather . . .0430088

The bench was stained with *Varathane*'s "Gunstock" oil-based wood stain, then sprayed with three coats of lacquer.

REINFORCED VENEER *(p.58)*

Reinforced veneers are available from a number of different specialty woodworking stores, as well as online retailers. The reinforced veneers shown in the article were supplied by *Rockler* and *Wisewood Veneer*.

COMPOUND MITERS *(p.62)*

- **Lee Valley**
  Veritas Bevel Setter. . . .05N66.01

Two online calculators for determining compound miter angles can be found here: *http://jansson.us/jcompound.html* and *http://pdxtex.com/canoe/compound.htm*.

The Complete *Woodsmith* Magazine Collection *1979 to 2016*

- ✓ **Access Every Issue, Article, Photo, and Illustration Ever Published!**
- ✓ **Every Plan, Tip, and Technique, Everything You'll Ever Need!**
- ✓ **Instant Online Access on Your Computer, Laptop, Tablet, or Smarphone!**

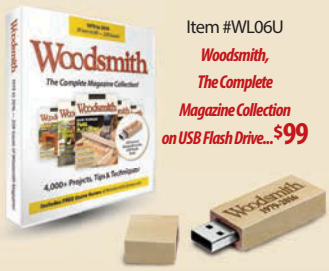

Item #WL06U
Woodsmith, The Complete Magazine Collection on USB Flash Drive... $99

MAIL ORDER SOURCES

Project supplies may be ordered from the following companies:

amazon.com

Benjamin Moore
benjaminmoore.com

Fabric.com
888-455-2940
fabric.com

General Finishes
800-783-6050
generalfinishes.com

Harbor Freight
800-423-2567
harborfreight.com

Home Depot
800-466-3337
homedepot.com

Kreg Tool
800-447-8638
kregtool.com

Lee Valley
800-871-8158
leevalley.com

Lowe's
800-445-6937
lowes.com

McMaster-Carr
630-833-0300
mcmaster.com

MSC Direct
800-645-7270
mscdirect.com

Peachtree Woodworking
888-512-9069
ptreeusa.com

Rockler
800-279-4441
rockler.com

Rust-Oleum
(Varathane & Watco)
rustoleum.com

Wisewood Veneer
855-883-6337
wisewoodveneer.com

Woodcraft
800-225-1153
woodcraft.com

looking inside
Final Details

▲ *Coat Rack.* At first glance, this weekend project looks like nothing more than a piece of wall art. But flip down one or more of the five hooks and you have an instant coat rack. Plans start on page 18.

▲ *Martin House.* The custom design of this birdhouse will be the envy of the neighborhood. And the birds will like it, too. You'll find plans on page 26.

▲ *Sawbench.* Whether you build a pair or just one, you'll find plenty of uses for this traditional sawbench. Turn to page 22 for step-by-step plans.

▲ *Empire Bench.* The legs and slats at each end of this handsome bench flow outward in graceful curves. But don't worry — there's no bending of wood involved. To learn the secret of how it's done, turn to page 44. From there, we'll walk you through each step of the construction, from start to finish.

▼ *Sharpening Station.* Turn a low-cost bench grinder into an all-purpose tool sharpening station with this simple shop project. We explain how to build it on page 36.